Request for Proposal (RFP)

Turnkey project for undersea cable project in A & N Islands connecting mainland India

Andaman & Nicobar Islands Integrated Development Corporation (ANIIDCO)

Vikas Bhawan, Port Blair

A&N Islands – 744101

Table of contents

Sl. No.	Particulars	Page Number
1	**Section I – Invitation of Bids**	3
2.	**Section II – Eligibility Criteria**	6
3	**Section III – Project Profile**	8
4	**Section IV – Scope of Work**	10
5	**Section V – Service Level Agreement**	27
6	**Section VI – Instruction to Bidder**	34
7	**Section VII – General Conditions of the Contract**	50
8	**Section VIII – Formats to Response to the Tender – Pre Qualification Bid**	90
9	**Section IX – Format for Response to Tender – Technical Bid**	98
10	**Section X – Format for Response to Tender – Commercial Bid**	107
11	**Annexures**	122

SECTION - I

Invitation for Bids

The invitation to bid is for "Turnkey project for undersea cable project in A & N Islands connecting mainland India". The Scope of work of this project is to lay dedicated undersea cable network and create reliable, diversified, telecom connectivity along with the landing stations at 9 locations in Andaman and Nicobar Islands. The above cable system should be connected using 2 Branching units to the existing undersea cable connecting Chennai and Southeast Asian countries. The cable between BU and 2 landing point i.e. Port Blair and Campbell Bay shall be 2 pair optical fiber cable. The above infrastructure/connectivity has to be operated and maintained for 15 years.

The bidders are advised to study the tender document carefully. Submission of bids shall deemed to have been done after careful study and examination of the tender document with full understanding of its implications. This section provides general information about the Issuer (ANIIDCO), important dates and addresses and the overall eligibility criteria for the bidders.

Issuer

ANIIDCO herein after referred to as SIA (State Implementation Agency) invites proposals for "Design, Site Preparation, Supply, Installation, testing, Commissioning, maintenance and Operations of the Undersea Optical Fiber Cable Link connecting A&N Islands with Mainland India" and O&M of the cable system in A&N Islands. The scope of work and requirement of ANIIDCO for this project are specified of this RFP.

1.2 Issuer and Address for Correspondence

The General Manager
Andaman & Nicobar Islands Integrated Development Corporation Ltd (ANIIDCO)
Vikas Bhawan
Port Blair – 744101
Tel. No: 03192 – 232098
Fax: 03192- 232076
E-mail ID: aniidco@gmail.com

1.3 About the RFP Document

The Request for Proposal (RFP) covers Technical, Commercial Terms & Bid Process

- Section I – Invitation for Bids
- Section II – Eligibility Criteria
- Section III – Project Profile
- Section IV – Scope of Work
- Section V – Service Level Agreement
- Section VI – Instructions to Bidders
- Section VII – Terms & Conditions of the Contract
- Section VIII – Format for Response to Tender – Pre Qualification Bid
- Section IX – Format for Response to Tender – Technical Bid
- Section X – Format for Response to Tender – Financial bid
- Annexures – 1 – 8

1.4 Key Events & Dates

Event	Target Date
Non-refundable Tender document cost	Rs. 25,000/- through demand draft/bankers pay order from a scheduled bank, drawn in favor of "ANIIDCO Ltd" payable at Port Blair
Notice Inviting Tender	
EMD	Rs. 9,00,00,000/- (Rupees nine crores only) in the form of Demand Draft / Bank Guarantee valid for 06 (six) months from bid opening date in favor of "ANIIDCO ltd" payable at Port Blair from a nationalized bank.
Pre- Bid Meeting	Pre bid meeting were held on 21st December 2011, 15th February 2012, 4th & 5th April 2012 and 10th and 11th May 2012
Last date for submission of clarification	6th August 2012 till 3.00 pm
Last date for submission of bids	28th September, 2012 till 3:00 pm
Opening of Technical bids	28th September, 2012 at 3:30 pm
Explanations and Presentation on technical bid by short-listed bidders, if required.	Date to be decided later
Opening of financial bids	To be decided later
Language of the Bid	This bid should be filled in English language only. If any supporting documents are to be submitted, in any other language other than English, then translation of the same in English language attested by the bidder should be attached.

1.5 Procurement of RFP Document

The RFP document can be purchased from the ANIIDCO by paying a fee of Rs. 25,000/- (Rupees Twenty five Thousand Only) before the DATE and TIME fixed for bid submission or downloaded from website www.and.nic.in. Failure to pay Bid Document cost will make bidder ineligible for participating in Bid process. This fee shall be paid in form of a demand draft of any nationalized / scheduled bank located in India, payable at Port Blair, drawn in favor of "ANIIDCO ltd", Port Blair.

1.6 Pre Bid Meeting

ANIIDCO organized a pre bid meeting with the bidders on 21st December 2011, 15th February 2012, 4th & 5th April 2012 and 10th and 11th May 2012 based on which amendments made in the RFP document is being hosted from the website www.and.nic.in

1.7 Amendment of RFP Document

At any time till 7 days before the deadline for submission of bids, ANIIDCO may, for any reason, whether at own initiative or in response to a clarification requested by a prospective Bidder, modify the bidding document by amendment. All the amendments made in the document would be hosted on the website www.and.nic.in. All such amendments shall be binding on all the bidders. **The bidders are also advised to be in touch by emails /fax with ANIIDCO for ensuring all up dates.** ANIIDCO also reserves the rights to amend the dates mentioned in clause 1.4 of bid document.

1.8 Venue and Deadline for submission of Proposal

Proposals for Andaman and Nicobar ANIIDCO project must be received at the address specified below not later than dates specified in Section 1.4 of this document.

General Manager,
Andaman & Nicobar Islands Integrated Development Corporation Ltd. (ANIIDCO)
Vikas Bhawan, Port Blair – 744101
Tel. No: 03192-232098
Fax: 03192-232076
E-mail ID: aniidco@gmail.com

Any proposal received by the SIA (ANIIDCO) after the deadline for submission of proposals mentioned in Section 1.4 above will be summarily rejected and returned unopened to the Bidder. SIA shall not be responsible for any postal delay or non-receipt/ non-delivery of the documents. No further correspondence on the subject will be entertained.

SECTION - II

Eligibility Criteria

The bidder must possess the requisite experience, strength and capabilities in providing the services necessary to meet the requirements as described in the RFP document. Keeping in view the complexity & volume of the work involved, the following criteria are prescribed as pre-qualification criteria for bidder interested in undertaking the project. The bidder must also possess the technical know-how and the financial wherewithal that would be required to successfully execution of the project and support services sought by the State for the entire period of the contract. The bids must be complete in all respect and should cover the entire scope of work as stipulated in the tender document. The invitation to bid is open to all bidders who qualify the eligibility criteria as given below:

S. No	Criteria	Documents required
1.	Telecom service provider having existing undersea cables from mainland India towards South East Asia OR Telecom service providers who agree to lay undersea cable from mainland India to A & N Islands or towards South East Asia in next one year from the date of RFP and owning undersea cable measuring atleast 1000 kms anywhere in the world. Bidder can be individual company or consortium. Consortium" shall mean more than one company which joins with other companies of complementing skills to undertake the scope of work defined in this RFP. In case of consortium the same shall not consist of more than three companies/ corporations, including the prime bidder.	(i) Documentary proof regarding ownership of undersea cable or copy of the Board resolution certified by Managing Director or Company Secretary regarding decision of laying undersea cable and documentary proof of ownership of cable. (ii) In case of consortium documents as mentioned in Annexure - 1 to be submitted.

2.	The bidder/prime bidder should be a company registered under the Companies Act, 1956 since last 3 years	Certificate of incorporation
3.	The Bidder (individually or as consortium) should have positive net worth of at least ₹ 500 crores as on 31.03.2011 and an average turnover of more than ₹ 300 crores as on year ending 31.03.2011 for last three Financial Years i.e. 2008-09, 2009-10 & 2010-11.	1. Chartered Accountant /CPA certificate for Net-worth. Net-worth shall exclude any revaluation reserve. 2. Copy of the audited annual accounts of the company for last three years.
4.	(i) The Bidder should furnish, as part of its bid, an Earnest Money Deposit (EMD) of ₹ 9,00,00,000 (ii) Cost of tender document of ₹ 25,000	(i) The EMD should be denominated in Indian Rupees, and should be in the form of DD / Bank Guarantee in favor of ANIIDCO payable at Port Blair from any nationalized bank. (ii) Receipt/DD towards cost of tender document.
5.	The Bidder and all consortium partners shall not be under a Declaration of Ineligibility for corrupt or fraudulent practices or blacklisted with any of the Government agencies.	Declaration in this regard by the authorized signatory of the prime bidder/bidder as per format at 8.4
6.	The Bidder should have tie up with the shipping agency for arranging the ships for cable laying	Letter/MOU from cable laying shipping agency confirming the tie up with them, for laying of cable & submerged equipment.
7.	The balance life of the undersea cable system offered for insertion of branching unit should be at least 15 years from the date of signing of contract.	Confirmation letter from cable owner
8.	Power of Attorney executed by the Bidder in favour of the Principal Officer or the duly Authorized Representative, certifying him as an authorized signatory for the purpose of this Tender.	Power of Attorney

Note:

1. Terms and conditions applied in case of consortium is defined in Annexure – I
2. In case of consortium company owning undersea cable only consortium can participate in the bid, not any member of the consortium.

SECTION - III

Project Profile

3.1. **ANIIDCO's Overview**

Andaman and Nicobar Islands Integrated Development Corporation Limited (ANIIDCO) is the Government Company registered under the Companies Act, 1956. The Corporation is engaged in activities of trading, development of tourism and other infrastructure. The turnover and profit before tax of the Corporation during the year 2010-11 was ₹ 177.07 crore and ₹ 10.82 crores respectively.

Planning Commission, Government of India has approved the proposal of providing undersea optical fiber connectivity between mainland India and A&N Islands and work is proposed to be executed through ANIIDCO. The fund for the project shall be provided by Government of India.

3.2 State Specific Information

Andaman and Nicobar Islands is situated in the eastern bank of Indian Territory. Port Blair, the capital of Union Territory is situated about 1200 kms from Kolkata/Chennai. A & N Islands comprise of over 572 islands out of which 38 islands are inhabited. Presently, voice and data communication among with islands and mainland is through the Satellite based connectivity.

In view of the strategic geo-position of the islands a good reliable telecommunication link between mainland India and the islands is necessary.

It is, therefore, proposed to construct a dedicated optical fiber cable connectivity of the Andaman and Nicobar with mainland India by inserting BU on existing cable passing through A & N Islands.

Revised RFP for undersea cable system

The details of the islands proposed to be connected through undersea cable are as under:

Sl. No.	Name of the island	Approximate distance from Port Blair (Kms)
1.	Port Blair	-
2.	Havelock	39
3.	Neil	37
4.	Little Andaman (Hutbay)	122
5.	Car Nicobar	278
6	Katchal	422
7.	Teressa	380
8.	Kamorta	435
9.	Great Nicobar (Campbell Bay)	554

A map indicating islands to be connected by undersea cable may be seen at figure No. 1 & 2 of the RFP (Page No. 12 and 13).

The power availability in all locations other than Katchal and Teressa is 24 hours, while the availability of power in Katchal and Teressa is 12 hours. Bidders are required to make necessary power backup arrangement by installing battery backup and DG set. It will be the responsibility of the bidder to arrange supply of HSD required for operation of backup DG set. ANIIDCO will however assist the bidder in getting raw power connection from Electricity Department and HSD supply. The cost of electricity charges and HSD consumed for backup DG set shall be reimbursed on actual basis subject to verification by ANIIDCO or its authorized representative.

SECTION – IV

Scope of Work

4.1 Project overview

The Scope of work of this project is to lay dedicated undersea cable network and create reliable, diversified, telecom connectivity along with the landing stations at 9 locations in Andaman and Nicobar Islands. The above cable system should be connected using 2 Branching units to the existing undersea cable connecting Chennai and Southeast Asian countries. The cable between BU and 2 landing point i.e. Port Blair and Campbell Bay shall be 2 pair optical fiber cable. The above infrastructure/connectivity has to be operated and maintained for 15 years. The component of the project is in the sequel:

Laying and Maintaining of undersea cable

a) Laying dedicated undersea cable system using 2 pair optical fiber cable, connecting Port Blair & Campbell Bay. The proposed cable should be connected to the existing undersea cable system between Chennai and South East Asian countries by inserting /using 2 BU's in the same International undersea cable at appropriate location in a ring configuration.

b) Laying of dedicated undersea cable and establishment of rings connectivity to 9 Islands viz. Hut Bay (Little Andaman), Havelock, Neil, Car Nicobar, Teressa, Kamorta and Katchal between Port Blair (South Andaman) and Campbell Bay (Great Nicobar) using 2 pair optical fiber cable (refer figure no 1 & 2)

c) Establishment of landing station at all locations, to support protected 1λ (10 Gbps) bandwidth, scalable in multiple of 1λ (10 Gbps).

d) Setting up of a Network Operating Centre (NOC) for management of undersea cable system and landing station.

e) Laying undersea cables in 02 creeks of length measuring around 500 mtrs each between Middle Strait and Baratang and Nilampur and Uttara using optical fiber cable and connecting with the existing BSNL terrestrial optical fiber cable.

f) Supply of equipment for the undersea cable system and landing stations with a warranty of 05 (five) years.

g) To operate and maintain the above infrastructure excluding two creeks of Middle Andaman and connectivity for a period of 15 years from the date of commissioning.

Supply and Management of Bandwidth

a) To allocate diversified, protected bandwidth of 10 Gbps (1λ) between Chennai and all the landing stations in A&N Islands for a period of 15 years. Hand off of bandwidth shall be done at Chennai.
b) For future requirement bandwidth may be required to be enhanced in multiples of 10 Gbps (1λ), for a period of 15 years.
c) Alternate/protection path equal to the bandwidth procured through any other cable system or international gateway in case of failure of the cable system subject to DOT Clearance by ANIIDCO.

The successful bidder shall obtain necessary operational permits/approvals from concerned agencies for bringing the ship to Indian waters, for anchoring of ship, for working of foreign persons in India, for cable laying maps, for conducting the survey in the sea bed, for finalizing the cable laying route, for laying of submarine cable system etc. and ANIIDCO shall obtain necessary permits/approval for CRZ clearance, ROW for land route construction, NOC from local authority for the project, NLD license and permit in principle. The details of permits to be obtained by the successful bidder and ANIIDCO are enclosed at Annexure – 6.

It will be the responsibility of successful bidder to obtain permits in its scope and all expenses relating to obtaining operational permits has to be borne by the successful bidder.

Figure No1: SLD Single Line diagram

Proposed undersea cable system (2 BU in same cables)

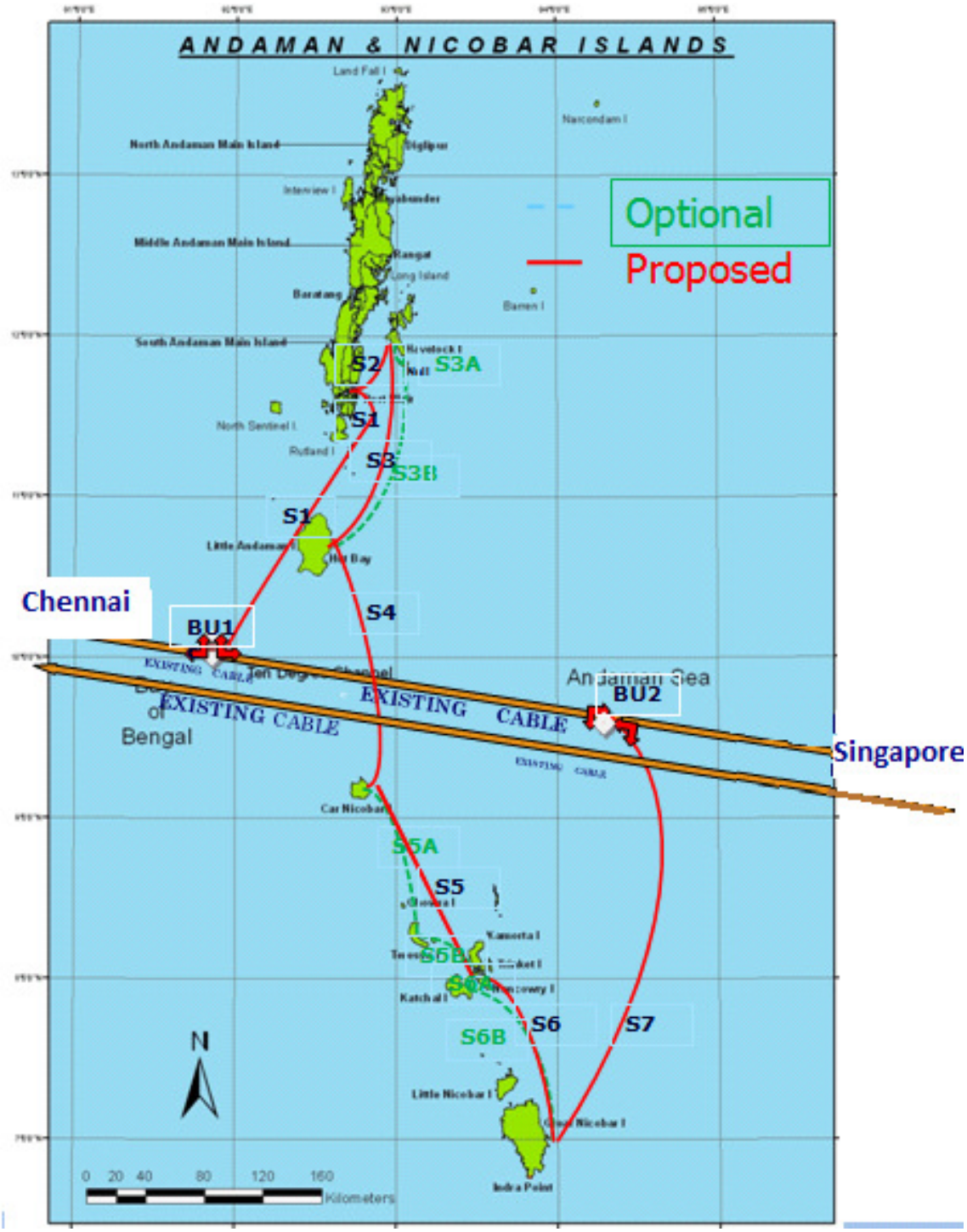

Figure No 2: Logical Diagram

Proposed undersea cable system (2 BU on same cable)

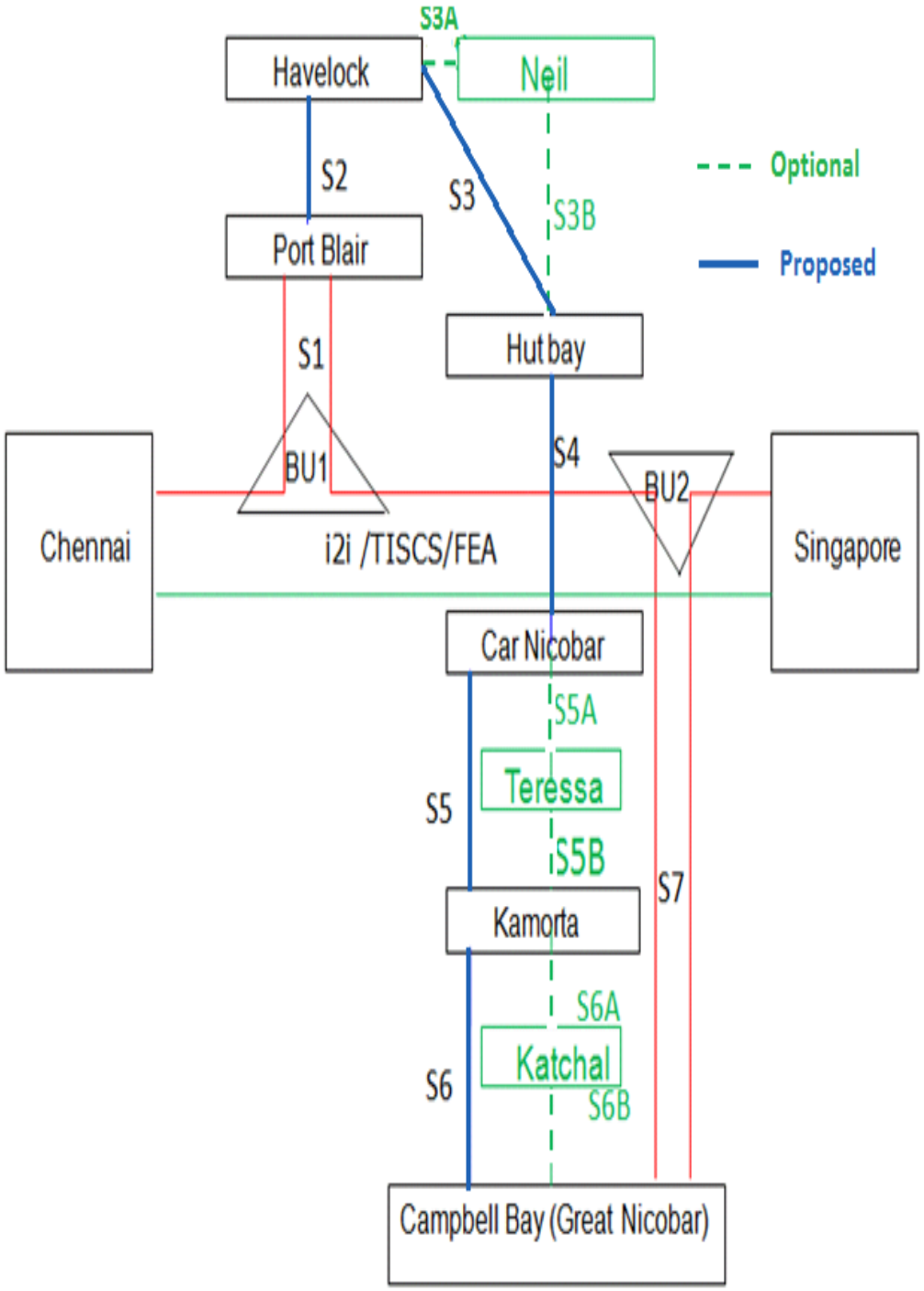

4.2 Design, supply, installation, testing and commissioning

The work indicated in section 4.1 has to be carried out as per the below mentioned approach.

4.2.1 Desktop study and Marine Route Survey

The desktop study and marine survey for selection of the route, finalization of the type of cable, length of each type of cable, preparation of single line diagram of undersea cable system indicating the location of beach manholes/landing points and the backhauling terrestrial cable.

The bidder shall be absolutely responsible for item and quantities and offered by them. A copy of the desktop study and marine survey has to be submitted to ANIIDCO.

4.2.2 Design of undersea cable system and landing station

The basic Optical cable system configuration has been provided in Figure No 1 & Figure No 2.

The following points need to be considered while designing the cable system:

a) All the submerged cable system should be compatible to the existing cable system and should have balance life of at least 15 years
b) Andaman and Nicobar Islands falls under Seismic Zone – 5. The proposed cable system should be built, taking necessary precautions from the earthquake/tsunami point of view.
c) Land required for construction of beach manhole and vacant building space for the landing station shall be provided by ANIIDCO. It has been proposed to utilize existing BSNL building in all islands for cable landing stations. The successful bidder needs to confirm layout plan for the building and vacant space required for cable landing station and confirm suitability of the proposed building for cable landing station for construction of additional space if required before award of work.

CRZ clearance required for construction of beach manhole and cable landing station if required, ROW for construction of trenches for terrestrial cable shall be obtained by ANIIDCO. All government taxes, fees, rent etc. related to land shall be borne by ANIIDCO/A & N Administration for the entire duration of the contract.

d) The landing station should have a provision to support various customers ranging from 2 Mbps to 10 Gbps. The common interfaces used by customers should be made available in the landing station.

e) The undersea cable system and all the equipments in landing station shall have the warranty for 5 Years. Beyond this period the cable system and equipment shall be covered by Annual Maintenance Contract (AMC) upto 15 years.

f) The bidder is required to submit the minimum guaranteed design parameters, which shall be maintained for the whole life of 15 years, which can be verified during FAT / final acceptance testing by ANIIDCO & third party.

g) The design of landing station shall include:
   - Complete layout of the building for cable landing station and beach manhole.
   - The bill of material (all telecom, facilities, BMS, GPS antenna, CCTV and security system, fire management system, rodent repellent, water leak detection system) along with broad specifications.
   - Electrical single line diagram along with cable tray.
   - Telecom data cabling single line diagram along with cable trays.

h) The maximum design capacity of the undersea cable system shall be minimum 640 Gbps.

i) The spur route cable to be set up from BU 1 to BU 2 shall be a dedicated branching cable used by ANIIDCO and bidder will not have any right to use the spur route cable for his own traffic.

j) Indefeasible Right to Use (IRU) fibre pair from Chennai to Singapore via A & N Islands for a period of 15 (fifteen) years from the date of commissioning.

k) Both the branching units (BUs) shall be owned by the bidder and no payment towards the same shall be made by ANIIDCO.

4.2.3 Supply of equipment

4.2.3.1 Landing Station Equipment

The successful bidder shall procure/manufacture, supply, the following items:

a) All telecom equipments, BMS, GPS antenna, CCTV and security system, fire management system, rodent repellent, water leak detection system, and any other equipment required to support, safe operation of the landing station.

b) All facilities equipment to support landing station as well as cable system

c) The landing station should be supported with safe, reliable, power supply to achieve SLA. Arrangements may include Rectifier, sufficient capacity battery backup, DG set and proper earthings as per ITUT standards.

d) Environment control equipment

The landing station should maintain safe level of temperature and humidity according to the recommendations of equipment suppliers. For this sufficient capacity HV AC should be supplied. It should have redundancy to ensure safe and reliable operation.

e) Fire and smoke safety

Supply should include all the facility equipments required for fire safety of the landing station, it may include VESDA fire alarm system, fire protection equipments, fire gas suppression system gas cylinders, water leak detectors, fire alarm management

f) Door access control system

Biometric door access control system should be supplied to ensure quick and safe entry of employs and visitors

g) GPS Antenna and Lightning arrestor

To support synchronization of SDH GPS antenna may be required, this should be supplied along with lightning arrestor.

h) All the material, consumables required for installation to complete the work.

i) All the outdoor equipments shall have the rain protection and necessary cooling arrangements.

4.2.3.2 Supplying and laying of terrestrial and undersea cable system

The successful bidder shall supply and lay the undersea cable system and undertake the following:

- Burial, rock cutting and other marine installation of all submerged equipment and cable as per industry standard.
- The undersea cable for each segment should be factory assembled and integrated with all items required to support the required bandwidth
- Laying of terrestrial (Backhauling cable) should be done in safe manner, could be in tranches.
- Surplus cable coil of sufficient lengths may be buried outside the beach manhole for future requirements.
- Joining the undersea cable with terrestrial cable in end termination kit should be done in beach manhole.
- Laying of terrestrial cable alongwith trenching from beach manhole to landing station.

- Laying of earth cable joining the 2 Nos. sea cable earths with PFE in the landing station.
- The equipment required for setting up of Network Operating Centre (NOC) with craft terminals.
- Connecting two creeks using three lengths of 12 fibre submarine cable (6 pairs X 3 lengths) on three different routes between the existing two joints and proposed for the second 24 fibre cable on each side of above two creeks. The proposed submarine cable should have all technical capabilities to connect the terrestrial SM optical fibre cable confirming to ITU-T G652 D specifications.

4.2.4 Civil Works for Beach Manhole (BMH) and landing station

The successful bidder shall undertake construction of the following:

(i) Construction of beach manhole, trench for backhauling cable, platforms, and all other facility required for beach manhole.

(ii) Construction of trenches for laying of terrestrial cable from beach manhole to cable landing station.

(iii) Construction of all earthings (sea cable earths for earthing of submarine cables), earthings for neutral of the electrical power/DG/UPS, telecom equipment earthing (also called clean earth), system earth for earthing of body of all the equipments (also called dirty earth). Grounding of body of each equipment shall be done as per relevant ITUT specification.

(iv) Additional civil and electrical works required for installation of equipment in the cable landing station, furniture required in the cable landing station etc.

4.2.5 Installation, testing and commissioning

The successful bidder shall undertake the following works related to installation, testing and commissioning of undersea cable system:

- Connecting the power supplies and earthings to each of the equipment as per the cable layout diagram following ITUT norms.
- Connecting data cable and optical fiber
- Checking the functionality of each equipment individually and their testing
- Integration of undersea cable system fibers with landing station equipments to establish proper communication
- Establishing the communication link with adjacent landing stations.
- Synchronization of SDH with clock pulse.
- Fine tuning the settings and parameters to establish long time stability

- Setting up of landing station as per the layout, positioning of all the telecom and facility equipments after proper testing. A copy of the test result to be given to ANIIDCO.
- All the devices that present in the landing station should be SNMP enabled/manageable and connected with building management system (BMS) and shall be centrally and remotely monitored and managed on a 24x7x365 basis.

4.2.6 Acceptance testing

The bidder shall forward the quality acceptance criteria & test plan for testing of each equipment alongwith technical bid. ANIIDCO shall review and approve the detailed final acceptance test plan (FAT) supplied by the bidder along with the FAT procedure.

To ensure the quality of the cable system and landing stations, the testing of each and every equipment shall be done as per the following schedule:

- First time equipments shall be tested by the successful bidder (as part of commissioning),
- The equipment shall also be tested by the third party deputed by ANIIDCO.
- The equipment has to undergo performance trial and stability test for 15 days before final acceptance within the project completion period of each phase.

The cable system shall be accepted after the verification of test results and successful completion of stability period or performance trail of 15 days followed by 01 week of Ready for Commercial Service (RFCS) test. In case of non-acceptance other than failure of RFCS test within the above timeframe, it will be considered as deemed acceptance.

4.2.7 Training

Training to the ANIIDCO staff or the staff nominated by ANIIDCO shall be provided at the site covering all functional and maintenance aspects of each equipment as per the mutually agreed plan.

The training module may cover, installation commissioning procedures, Do's & Don'ts, Operation Manuals, Maintenance manuals, Catalogues, hand outs, brochures for each and every equipment, Copy of testing procedure (FAT), Civil, Electrical and General Layout drawings, Landing station Operation and Management, Alarm Reporting system and NMS functioning, Door access and CCTV functioning and their layouts, Fire fighting system functionality and alarm management, Maintenance and Troubleshooting using BMS, fault location process for Undersea cable System.

An indicative training schedule may be provided in advance

4.2.8 Documentation

The successful bidder shall provide all as build construction drawings, electrical drawings, undersea cable system laying details, cable coordinates, single line diagram, installation & commissioning test procedures & results, warranty certificate, training material, O&M manual, license/IPR for software, letter from OEMs regarding support of 15 years and all the documents relevant to the project to the ANIIDCO before final acceptance of the cable system. All the documents required by ANIIDCO from time to time to satisfy queries raised by concerned Govt. agencies.

4.2.9 Warranty & Comprehensive Maintenance Contract

All the equipments supplied by the bidder shall have the warranty replacement against any design, manufacturing and installation defects for a period of 5 years from the date of acceptance of the undersea cable system. The system has to be supported for 10 years through a comprehensive maintenance contract after warranty period of 5 years.

The vendor shall maintain a log of all the defect/replacement carried out from time to time.

4.2.10 Security of Network

The successful bidder shall induct only those network elements into the telecom network which have been tested as per relevant contemporary Indian or international security standards as per DOT guidelines/circulars.

Successful bidder shall audit the network or get the network audited from security point of view once a year from a network audit and certification agency from the approved list of DOT. The cost of network audit shall be reimbursed on actual basis subject to production of documentary proof.

The successful bidder shall also be responsible for applying applicable law including but not limited to notifications, circulars etc. issued by DOT from time to time.

4.3 Operation and Maintenance of undersea cable system and landing stations

4.3.1 Management of undersea cable system including spares

The operation and maintenance of undersea cable system and landing station has to be done for 15 years from the date of acceptance. This shall cover the following:

- Ensuring the availability of bandwidth as per SLA commitment.
- Manning all the landing station in 24 X 7 X 365 basis.
- Setting up, operation and maintenance of a Network Operating Centre (NOC) at Port Blair or outside Port Blair but with a remote terminal at Port Blair. The scope of work of NOC is enclosed as Annexure – 7.
- Setting up of office with all the support staff/engineers for operation.
- To keep a log of all the defects/fault in the cable system including the down time details.
- To cover free replacement of spares during warranty period of 05 years for undersea cable system and landing station equipments.
- Provide annual maintenance for a period of 10 years after warranty including repair and replacement of any faulty equipment or part thereof, carry out preventive maintenance.
- Ensuring the availability of power supply un-interruptedly to achieve the SLA.
- Conducting surveillance and checking the functionality of each equipment in fixed intervals is part of O&M including procedure for alarm management.
- Maintenance of stock register and asset register.
- Maintaining the stock of spares to ensure that the uptime commitment Equipment or Component that is reported to be down on a given date should be either fully repaired or replaced by temporary substitute (of equivalent configuration) within the time frame indicated in the Service Level Agreement (SLA). In case the successful bidder fails to meet the above standards of maintenance, there will be a penalty as specified in the SLA.
- In case there are changes in technology, (such as addition or Up-gradation of Hardware, Software, Tools, equipments, active or passive) bidder needs to provide necessary hardware and resources with suitable technical competencies with project requirements without any additional charges as and when required to ensure continuity of services scalable upto 640 Gbps.
- Operation and maintenance expenses during operation phase shall be borne by the successful bidder and ANIIDCO as per the following arrangement:

(i) The successful bidder shall bear the manpower cost for operation and maintenance of the undersea cable system as per the schedule F. The manpower cost shall be increased on yearly basis based on Consumer Price Index (CPI).

(ii) The successful bidder shall be responsible for comprehensive maintenance for all equipment at landing station, terrestrial cable and beach manhole after the warranty period for the balance period of 10 years.

(iii) Repair and maintenance charges for wet part (undersea cable system) shall be paid to the cable maintenance agency on actual basis. The successful bidder shall enter into an agreement with the cable maintenance agency for repair and maintenance of the same. The bidder shall be paid 15% of SEAIOCMA fixed annual charges towards their administrative expenses.

(iv) Electricity charges for the landing stations and diesel consumed for backup DG set shall be arranged by the successful bidder, however its expenses shall be borne by ANIIDCO on actual basis subject to verification. Successful bidder shall also make necessary arrangement for storage of HSD required for operation of backup DG set.

- Any other activity required for smooth operation and maintenance of undersea cable system leading to supply of bandwidth.

4.3.2 Helpdesk services

The help desk service will serve as a single point of contact for all incidents and service required by the customers.

- Provide Help Desk facility during 15 years for reporting customer incidents / issues / problems or faults within the telecom infrastructure created by them.
- Provide necessary support on incident management which could be as following:
  - Non availability of specific service
  - Fault in some equipment
  - Alarm management
- Implementation of call logging system in line with the severity levels as per the SLAs. The Help desk shall log user calls related to undersea cable system and assign an incident/ call ID number. Severity shall be assigned to each call as per the SLAs.
- Creation of knowledge base on frequently asked questions to assist user departments in resolving basic issues themselves
- Track each incident / call to resolution
- Provide feedback to callers.

4.3.3 MIS reports

The successful bidder shall submit the reports on a regular basis in a mutually decided format. The following is only an indicative list of MIS reports that may be submitted to the State:

a. Daily reports

- Summary of issues / complaints logged at the Help Desk
- Summary of resolved, unresolved and escalated issues / complaints
- Summary of resolved, unresolved and escalated issues / complaints to respective customers.
- Log of backup and restoration undertaken.

b. Weekly Reports

- Issues / Complaints Analysis report for virus calls, call trend, call history, etc.
- Summary of systems internal faults and external faults
- Summary of issues / complaints logged with the OEMs.
- Inventory of spare parts

c. Monthly reports

- Component wise physical as well as infrastructure availability and resource utilization
- Consolidated SLA / (non)- conformance report.
- Log of preventive / scheduled maintenance undertaken
- Log of internal (within landing station) & external (in undersea cable system) faults & maintenance undertaken
- Detection of security vulnerability with the available solutions / workarounds for fixing.

d. Quarterly Reports

- Consolidated component-wise availability and resource utilization.

e. Half- yearly Reports

- Detection of security vulnerability with the available solutions / workarounds for fixing.
- Hacker attacks, Virus attacks, unauthorized access, security threats, etc. – with root cause analysis and plan to fix the problems.
- Software license violations

4.3.4 Visitor Management System

Due to security requirements of landing station, NOC, visitors shall be screened, registered, signed in quickly and allowed to visit only the relevant areas via integration with access control devices. These challenges of the visitor management and lobby management activities are seamlessly and efficiently managed by Visitor Management System. The activities shall include:

- Provision for storage and use of computerized photo of the visitors
- Each pass has necessary details of the visitor
- List of visitors inside the premises, whenever, required
- Extensive query support
- Duration of stay of each visitors
- Give details of all visitors visited in the past without delays
- Details of visitors vehicles like type and registration number
- Data backup facility
- Data is stored using latest compression techniques

Current data upto 03 months to be kept in server with backup facilities on regular basis. Data beyond 03 months has to be archived in external storage device of appropriate capacity.

4.3.5 Bandwidth requirement

The required diversified bandwidth at all landing station is minimum 10 Gbps (1 λ) in ring configuration connecting all theses Islands with the mainland India. The addition of bandwidth between Chennai & Port Blair, shall be purchased in multiple of 10 Gbps (1 λ) from time to time.

The connectivity to 09 Islands (06 essential & 03 optional namely, Neil, Katchal & Teressa) shall be using DWDM/SDH equipments to provide 10 Gbps connectivity.

The handoff of the bandwidth shall be done at Chennai, for this what ever equipment are required to support various customers of assorted bandwidth shall be provided. However, the applicable interconnect charges shall be payable by ANIIDCO at the prevailing market rate.

Additional bandwidth in multiples 10 Gbps including cost of restoration of bandwidth equal to the bandwidth procured, as and when required, shall be provided with a lead time not exceeding 03 months.

The cost of initial bandwidth of 10 Gbps (1 λ) for 15 years shall be part of Capital Cost (CAPEX) and future upgrades in the multiples of 10 Gbps including cost of restoration of bandwidth equal to bandwidth procured shall be at the prevailing market price at the time of upgrade plus service charge of 15%.

In case of failure of cable alternate/protection path of bandwidth through any other cable system or international gateway to be provided. Protection path using international gateway shall be subject to DOT clearance by ANIIDCO and payment for the same shall be made only if the protection path is utilized.

4.4 Role and responsibilities of stakeholders

The roles of the stakeholders shall change over a period of time as the project will evolve from design to implementation and enter the operations phase. With this background, stakeholders' responsibilities, illustrative organizational structure for the design & implementation phase, operational phase is given below:

Below mentioned table summarizes the roles and responsibilities of stakeholders involved in the project.

S. No	Activity	ANIIDCO	Bidder
Project Conceptualization Phase			
1	Issue of RFP	Y	
2	Evaluation of RFP	Y	
Project Implementation Phase			
1	Selection of site for beach manhole		Y
2	Selection of site for landing station	Y	
3	Conducting desk top study and marine survey		Y
4	Construction of beach manhole		Y
5	Building for cable landing station	Y	
6	Providing connection for raw power for cable landing stations	Y	
7	Civil Works for trenching for terrestrial cable, installation of equipment at landing station		Y
8	Designing of undersea cable system and landing station configuration		Y
9	Submission of final BOM for entire undersea cable system		Y
10	Submission of test procedure & FAT Plan		Y
11	Inspection before shipment of Factory test certificates		Y

12	Supply (shipment, insurance, custom clearance, port handling, local transport, unloading & unpacking at site)		Y
13	Seeking all environmental clearances/CRZ and approvals for beach manhole, cable landing station and ROW for construction of trenches for terrestrial cable	Y	
14	All operational permits for execution of the project.		Y
15	Laying of Undersea Cable system		Y
16	Supplying Catalogue & test reports of bought out items of equipments.		Y
17	Training of ANIIDCO staff		Y
18	Dry run and testing and commissioning of equipments.		Y
19	Arranging all the test equipments required for commissioning and acceptance testing		Y
20	Forwarding test results to ANIIDCO for review and acceptance		Y
21	Third party acceptance of cable system and landing station equipments.	Y	
22	Providing the soft copy and 2 signed copies of test report		Y
23	Providing all as build documents, drawings and specifications, operational manuals		Y
24	Detail of alarms points (dry contacts) and connectivity diagrams		Y
25	Electrical circuit drawings		Y
26	Drawings of Electrical Panels, Power supply to all the equipments etc		Y
27	15 days performance test cum stability test report	Y	Y
28	07 days of ready for commercial service (RFCS)	Y	Y
29	Final acceptance	Y	
Operation and Management Phase			
1	Providing the required bandwidth between Chennai and all islands in A & N islands in the contract		Y
2	Operations & Management of ANIIDCO undersea cable system as per SLA		Y
3	Operations & Management of ANIIDCO landing stations as per SLA		Y
4	Manpower, comprehensive AMC for landing station equipment, repair and maintenance of undersea cable system through SEAIOCMA		Y
5	Supply of diesel in all landing stations	Y	
6	Availability of backup power and air conditioning and other support facility services to ensure SLA commitment		Y
7	CCTV surveillance and hand key biometric access control		Y

8	24x7 monitoring support Helpdesk		Y
9	Security Management – Refilling of Fire safety devices		Y
10	Obtain and maintain ISO 9001 certification	Y	Y
11	Security Audit		Y
12	SLA Audit	Y	
13	NLD and Principle in Permit (PIP) licence	Y	

4.5 Estimated timelines

The estimated time frame for completion of the project is 15 months for Port Blair and 20 months for other islands from the date of contract subject to extension of time due to Force Majeure or delay in getting applicable permits. Bidders to communicate tentative timeline for obtaining each permit in their technical bid. Extension of time for execution of the project shall be granted in the event of delay in obtaining permits which shall be decided after due diligence by ANIIDCO. However, if there is delay in completion of the project not due to Force Majeure or delay in getting applicable permits, penalty as per the contract shall be levied. The successful bidder is required to submit PERT chart highlighting the critical path.

SECTION – V

Service Level Agreement

The purpose of this Service Level Agreement (hereinafter referred to as SLA) is to clearly define the levels of service which shall be provided by the Implementation Agency (IA) to ANIIDCO for the complete duration of this contract.

The IA and ANIIDCO shall regularly review the performance of the services being provided by the IA and the effectiveness of this SLA.

5.1 Definitions

For purposes of this Service Level Agreement, the definitions and terms as specified in the contract along with the following terms shall have the meanings set forth below:

- "**Uptime**" shall mean the time period for which the specified services with specified technical and service standards are available to the state and user departments. Uptime, in percentage, of services shall be calculated as indicated below:

  Uptime = {1- [(Downtime) / (Total Time – Planned Maintenance Time)]} * 100
- "**Downtime**" shall mean the time period for which the specified services with specified technical and service standards are not available to the state and user departments and excludes the scheduled outages planned as a part of planned maintenance for the undersea cable system.
- "**Incident**" refers to any event / abnormalities in the functioning of the connectivity, landing station or NOC equipment / specified services that may lead to disruption in normal operations of the project services.
- **"Helpdesk Support"** shall mean the 24x7x365 centre which shall handle fault reporting, trouble ticketing and related enquiries during this contract.
- **"Resolution Time"** shall mean the time taken (after the incident has been reported at the helpdesk), in resolving (diagnosing, troubleshooting and fixing) or escalating (to the second level or to respective Vendors, getting the confirmatory details about the same from the Vendor and conveying the same to the end user), the services related troubles during the first level escalation. The resolution time shall vary based on the severity of the incident reported at the help desk. The severity would be as follows:

a. **Critical:** Incidents whose resolution shall require additional investment in components or time or shall involve coordination with OEMs. These incidents shall impact the overall functioning of the undersea cable system.

b. **Medium:** Incidents, whose resolution shall require replacement of hardware or software parts, requiring significant interruption in working of that individual component.

c. **Low:** Incidents whose resolution shall require changes in configuration of hardware or software, which will not significantly interrupt working of that component.

5.2 Category of SLAs

This SLA document provides for minimum level of services required as per contractual obligations based on performance indicators and measurements thereof. The IA shall ensure provisioning of all required services while monitoring the performance of the same to effectively comply with the performance levels. The services provided by the IA shall be reviewed by ANIIDCO that shall:

- Regularly check performance of the IA against this SLA.
- Discuss escalated problems, new issues and matters still outstanding for resolution.
- Review of statistics related to rectification of outstanding faults and agreed changes.
- Obtain suggestions for changes to improve the service levels.

  The SLA has been logically segregated in the following categories:

  1. Connectivity related service levels
  2. Help desk Services
  3. Compliance and Reporting Procedures
  4. Manpower related SLA

The following measurements and targets shall be used to track and report performance on a regular basis. The targets shown in the following table are applicable for the duration of the contract. All the targets for the measurements are calculated on a quarterly basis. Please note that the bidder should provide comprehensive, end-to-end service to maintain the connectivity Infrastructure, including replacement of the equipment in case of physical damage. No reason shall be entertained (unless those mentioned in Force Majeure) in case of un-availability of any service given in the scope of work in this RFP and the appropriate penalty shall be levied.

5.2.1 Connectivity related Service Levels

Following outlines the service level indicators & and the target performance levels to be maintained by the Agency during the contract period. These SLAs shall be strictly imposed and a third party audit/certification agency shall be deployed for certifying the performance of the Agency against the target performance metrics as outlined in the table below:

Connectivity / Service availability at Port Blair

S. No.	Measurement	Target	Severity	Penalty
1	Availability of bandwidth 10 Gbps between Mainland & Port Blair	≥99.9%	Critical	No Penalty
		<99.9% to ≥ 98%		1% of the quarterly payment of O&M for Port Blair
		<98% to ≥ 97%		5% of the quarterly payment of O&M for Port Blair
		< 97% to ≥ 96%		15% of the quarterly payment of O&M for Port Blair
		< 96% to ≥ 95%		30% of the quarterly payment of O&M for Port Blair
		< 95%		100% of the quarterly payment of O&M for Port Blair

Connectivity / Service availability in Other Islands.

S. No.	Measurement	Target	Severity	Penalty
1	Availability of bandwidth 10 Gbps in other islands	≥99.5%	Critical	No Penalty
		<99.5% to ≥ 98%		1% of the quarterly payment of O&M of six islands
		<98% to ≥ 97%		5% of the quarterly payment of O&M of six islands
		< 97% to ≥ 96%		15% of the quarterly payment of O&M of six islands
		< 96% to ≥ 95%		30% of the quarterly payment of O&M of six islands
		< 95%		100% of the quarterly payment of O&M of six islands

Note: Connectivity/Service availability related penalties shall be governed by the following conditions:

- The Penalty shall be calculated on a quarterly basis.
- If the SLAs drop below the lower limited specified for each component in the table above, it will be governed by the event of default clause as specified under Section VII: General Conditions of the Contract
- Availability of bandwidth 10 Gbps between in other Islands to be calculated by taking arithmetic average of uptime for locations other than Port Blair.
- Availability of bandwidth means availability of 10 Gbps bandwidth consistently on 24 x 7 basis which will be calculated.
- Non availability of connectivity/service due to following reasons shall be excluded from SLA:

  (i) Force Majeure events.

  (ii) Cable cut on both end of the BU leading to non availability of protection path subject to DOT Clearance by ANIIDCO for protection path using international gateway.
- In case of other islands it will be the responsibility of ANIIDCO to make arrangements for travels from Port Blair.
- In case of terrestrial cable cut, 04 (four) hours of Mean Time to Repair (MTTR) shall be allowed.

5.2.2 Help Desk Services

Time in which a complaint / query is resolved after receipt.

Type of Incident	Target	Penalty
Critical For critical the resolution time shall be mutually agreed by the State and the IA at the time of award of contract. T shall be the agreed resolution time.	T	No Penalty
	T1 = T+2 hours	0.05% of the quarterly payment of O&M for every unresolved call
	T2 = T1+2 hours	1% of the quarterly payment of O&M for every unresolved call
	> T2	2% of the quarterly payment of O&M for every unresolved call
Medium	1 day from the time of incident logged at the help desk	No penalty
	> 1 day and < =2 days	0.05% of the quarterly payment of O&M for every unresolved call
	> 2 days	1% of the quarterly payment of O&M for every unresolved call

Low	<= 2 days from time of response logged	No Penalty
	> 2 days and < = 4 days	0.01% of the quarterly payment of O&M for every unresolved call
	> 4 days	0.05% of the quarterly payment of O&M for every unresolved call
Application Monitoring Fault Reporting to User Departments in case of connectivity unavailability	30 minutes	1% of the quarterly payment of O&M for every hour of delay in reporting on an incremental basis to a maximum of 5%

5.2.3 Compliance & Reporting procedures SLAs

S.No.	Measurement	Definition	Target	Penalty
1.	Submission of MIS Reports	The IA shall submit the MIS reports as requested by ANIIDCO, Andaman and Nicobar Islands	Report for the previous month shall be submitted by the 7th of the next month. Penalty shall be levied only after the 10th of the month of submission	1 % of the quarterly payment of O&M for every 1 day of delay in submission on an incremental basis to a maximum of 5 %.

5.2.4 Manpower Resources Service Levels

In cases where 24x7 manpower is not available the support personnel should be available over phone. On critical situations or when directed by SIA, the support personnel must be available on site within 3 hours of request from SIA. Non availability of the support personnel as stated above will be treated equivalent to single occasion downtime for critical components. The manpower deployed by the IA should be on rolls of the respective IA and not contracted or outsourced personnel.

Measurement	Target	Severity	Penalty
Resource availability for all services requested under Operations and Maintenance Resource availability would be calculated as: (No. of shift days for which resource present at the designated location / Total no. of shift days) x 100	≥99% averaged over all resources designated for System Integration(SI) services and calculated on a quarterly basis	Critical	No Penalty
	≥97% to <99% averaged over all resources designated for SI services and calculated on a quarterly basis		2% of the quarterly payment of O&M
	≥95% to <97% averaged over all resources designated for SI services and calculated on a quarterly basis		3% of the quarterly payment of O&M
	<95% averaged over all resources designated for SI services and calculated on a quarterly basis		5% of the quarterly payment of O&M

Example: to illustrate the manpower availability in case there are there are 3 shifts per day which will have 2 people in shift 1, 1 in shift 2 and 1 in shift 3.
Total shift per day will be = 4 (2 x 1 + 1 x 1 + 1 x 1)
Per quarter it would be = 360 shifts
In a quarter if two people were not present in shift 1 for 7 days then 2 x 7 = 14 shifts will be considered for the unavailability of manpower.
Uptime % = (shifts in which manpower was available / total number of shifts) x 100
Uptime % = (1 – 14 / 360) x 100
Uptime % = 96.11%

5.2.5 SLA on outages due to faults in submerged part of undersea cable system

Repair and maintenance of submerged part of the undersea cable system shall be undertaken through SEAIOCMA for which IA shall enter into an agreement with SEAIOCMA based on authorization of ANIIDCO. The time frame for restoration of fault shall be as per the key performance indicators of SEAIOCMA agreement. It will be the responsibility of IA to coordinate with SEAIOCMA for timely restoration of fault and arrangement of all permits. On delay in reporting the fault is covered in SLA of MIS.

5.3 SLA Review Process

- Either ANIIDCO or IA may raise an issue by documenting the business or technical problem, which presents a reasonably objective summary of both points of view and identifies specific points of disagreement with possible solutions.
- A meeting or conference call will be conducted to resolve the issue in a timely manner. The documented issues will be distributed to the participants at least 24 hours prior to the discussion if the issue is not an emergency requiring immediate attention.
- ANIIDCO and the IA shall develop an interim solution, if required, and subsequently the permanent solution for the problem at hand. The IA will then communicate the resolution to all interested parties.
- In case the issue is still unresolved, the arbitration procedures described in the Terms & Conditions section will be applicable.

5.4 Penalties

- Three consecutive quarterly deductions of more than 100% of the applicable fee on account of any reasons will be deemed to be an event of default and termination.
- The certifications would be obtained by the IA latest by end of third Quarter of the operations phase failing which the subsequent QGRs will deferred till the certifications is obtained.
- In the event of any of the above happening, it shall be governed by terms & conditions defined in General Conditions of the contract.

SECTION – VI

Instruction to Bidders

6.1 Procedure for Submission of Bids

6.1.1 It is proposed to have a Three Cover System for this tender:
Pre-Qualification Bid – (2 copies) in one cover
Technical Bid - (2 copies) in one cover
Financial bid - (2 copies) in one cover

6.1.2 Each copy of Pre-Qualification Bid, Technical Bid and Financial bid of the Tender should be covered in separate waxed and sealed covers super-scribing "Pre-Qualification Bid", "Technical Bid" and "Financial bid" respectively. Each copy of each bid should also be marked as "Original", "First copy" and "Second copy" as the case may be. All the three copies of each bid should be put in a single sealed cover super-scribing "Pre-Qualification Bid", "Technical Bid" and "Financial bid" as the case may be. **Please Note that Prices should not be indicated in the Pre-Qualification Bid and Technical Bid but should only be indicated in the Financial Bid**.

6.1.3 The three envelopes containing copies of Pre-qualification Bid, Technical Bid and Financial bid should be put in another single sealed envelope clearly marked **"RFP for turnkey project for Undersea Cable Project in A&N Islands connecting mainland India"** of landing stations and Subsea Optical Fiber Cable System**"**. These envelopes are to be superscribed with Tender Number and the wordings **"DO NOT OPEN"** before **3.00 pm on 28.09.2012.**

6.1.4 The cover thus prepared should also indicate clearly the name, address, telephone number, E-mail ID and fax number of the bidder to enable the Bid to be returned unopened in case it is declared "**Late**".

6.1.5 Each copy of the tender should be a complete document. The document should be page numbered and appropriately flagged and must contain the list of contents with page numbers. Different copies must be bound separately. **Any deficiency in the documentation may result in the rejection of the Bid**.

6.1.6 In case of any discrepancy observed by ANIIDCO in the contents of the submitted original paper bid documents with respective copies, the information furnished on original paper bid document will prevail over others.

As part of the bid, Bidder should also provide the Technical and Financial bid in soft copy format, in the form of a non rewriteable CD (Compact Disc) as follows:

6.1.7 Three (3) copies of CD each containing the technical bid - The CDs containing technical bid should be sealed along with the hard copies of the respective technical bids.

6.1.8 Three (3) copies of CD each containing the Financial bid - The CDs containing Financial bid should be sealed along with the hard copies of the respective financial bids.

6.1.9 All CDs submitted by the Bidder must be in sealed covers. The sealed covers as well as the CD media must be duly signed by the Bidder using a “Permanent Pen/Marker”, should be super-scribed with “Technical Bid-Soft Copy” / “Financial Bid-Soft Copy” (as the case may be) and should bear the name of the Bidder.

6.1.10 Bidder must ensure that the information furnished by him in respective CD is identical to that submitted by him in the original paper bid document. In case of any discrepancy observed by ANIIDCO in the contents of the CDs and original paper bid documents, the information furnished on original paper bid document will prevail over the soft copy.

6.1.11 Bidder must ensure that Technical Bid CDs do not contain any Commercial items / prices.

6.1.12 Telex/Telegraphic/Tele-fax bids will not be considered. All out-station bids, if sent by post, should be sent under registered cover.

6.1.13 If the outer envelope is not sealed and marked as indicated above, ANIIDCO will assume no responsibility for the bid’s misplacement or premature opening.

6.2. Authentication of Bid

The original and all copies of the bid shall be typed or written in indelible ink. The original and all copies (hard copies) shall be signed by the Bidder or a person or persons duly authorized to bind the Bidder to the Contract. A letter of authorization shall be supported by a written power-of-attorney accompanying the bid. All pages of the bid, except for un-amended printed literature, shall be initialed and stamped by the person or persons signing the bid.

6.3 Validation of interlineations in Bid

The bid shall contain no interlineations, erasures or overwriting except as necessary to correct errors made by the Bidder, in which case such corrections shall be initialed by the person or persons signing the bid.

6.4 Cost of Bidding

The Bidder shall bear all costs associated with the preparation and submission of its bid including cost of presentation for the purposes of clarification of the bid, if so desired by ANIIDCO. ANIIDCO will in no case be responsible or liable for those costs, regardless of the conduct or outcome of the Tendering process.

6.5 Site Visit

The bidders may visit the sites and obtain additional information at their own cost and responsibility.

6.6 Clarification on Tender Document

6.6.1 A prospective Bidder requiring any clarification on the RFP Document may submit his queries, in writing, at the mailing address but not later than 3.00 pm on 6th August 2012. ANIIDCO reserves the right not to respond to any clarifications beyond the above date. The queries must be submitted in the following format only to be considered for clarification:

Sr. No	Section No.	Clause No.	Reference/ Subject	Clarification Sought
..	..	..	..	..

The queries not adhering to the above mentioned format shall not be responded.

6.6.2 ANIIDCO will respond in writing, to any request for clarification to queries on the Tender Document, received not later than the dates prescribed in clause 6.6.1. Clarifications (including the query but without identifying the source of inquiry) will be sent to all prospective bidders by e-mail who have purchased the RFP document.

6.7 Language of Bids

The Bids prepared by the Bidder and all correspondence and documents relating to the bids exchanged by the Bidder and ANIIDCO, shall be written in English language, provided that any printed literature furnished by the Bidder may be written in another language so long the same is accompanied by an English translation in which case, for purposes of interpretation of the bid, the English translation shall govern.

This bid should be filed in English language only. If any supporting documents submitted are in any language other than English, translation of the same in English language is to be duly attested by the bidder.

6.8 Documents Comprising the Bids

The bid prepared by the Bidder shall comprise the following components. The bids not conforming to the requirements shall be summarily rejected.

- **Pre Qualification Bid**

In support of eligibility, a bidder must submit the following documents (besides the other requirements of the tender), original copies or attested copies, as the case may be, in the absence of which the Bid will be rejected.

- Section VIII – Format 1: Pre qualification Bid Letter
- Section VIII – Format 2: General information about the Bidder
- Detailed checklist for pre-qualification dully filled in along with the supporting documents as defined in Section VIII – Format 3. Bidders are requested to add a column for page no. in the pre qualification check list table and provide the corresponding page no. of the respective criteria.
- Documentary proof regarding ownership of undersea cable/Board resolution regarding laying of new undersea cable.
- Certificate of incorporation.
- Net worth certificate duly certified by Chartered Accountant.
- Audited Annual Accounts of the company for the last three years.
- Pre qualification bid should contain Earnest Money Deposit (EMD) in a separate sealed envelope.
- Receipt of Rs. 25,000/- towards the cost of the RFP document or demand draft for Rs.25,000/- (Twenty five Thousand only) if the tender document is downloaded, payable in form of DD in favor of “ANIIDCO”, Port Blair in a sealed envelope.
- Power of Attorney executed by the Bidder in favour of the Principal Officer or the duly Authorized Representative, certifying him as an authorized signatory for the purpose of this Tender.
- A consortium of companies duly backed up by an Agreement, copy of the same to be submitted in case of consortium.
- Declaration that the bidder has not been debarred / blacklisted by any Govt. / Semi-Govt. organization for quality of services / product and there is no major complaint against the bidder by any organization as per, Section VIII – Format 4.
- MOU with Shipping Agency for laying of cable.
- Confirmation letter from undersea cable owner regarding balance life of 15 years.

- **Technical Bid**

The Technical Bid, besides the other requirements of the Tender, shall comprise of the following:

- Section IX – Format 1: Technical Bid Letter
- Section IX – Format 2: Design basis for technical solution
- Section IX – Format 3: List of layout plans for undersea cable system
- Section IX – Format 4: Specification, make and bill of material of equipment
- Section IX – Format 5: Project Implementation Schedule
- Section IX – Format 6: Operation and maintenance plan.
- Section IX – Format 7: Timeframe for obtaining permits.
- Section IX – Format 8: Acceptance procedure/test plan

- **Financial Bid**

The Financial Bid, besides the other requirements of the Tender, shall comprise of the following:

- Section X – Format 1: Financial bid Letter
- Section X – Format 2: Breakdown of Cost Components

- **Undertaking**

An undertaking from the Bidder stating the compliance with all the conditions of the Contract and Technical Specifications of the Bidding Document since no deviation will be acceptable to ANIIDCO.

6.9 Bid Prices

6.9.1 Bidder to quote consolidated prices in the following manner in Section X

(a) Capital cost (CAPEX) in Schedule C1 and C2 of Section X:

(i) Inclusive of all levies and taxes viz. excise duty, custom duty, VAT, sales tax, service tax, octroi, packing forwarding, freight, insurance, installation & commissioning, etc.

(ii) Exclusive of levies and taxes but inclusive of packing forwarding, freight, insurance, installation & commissioning, etc.

(b) Operating & maintaining charges in Schedule D1 and D2 of Section X towards manpower and AMC charges for landing station excluding taxes. However, bidders to indicate applicable tax rates if any. Bidders to also furnish details of discounted manpower and AMC charges as per Schedule E1 and E2.

The summary of consolidated prices excluding taxes and duties in Schedule A & B should tally with the total in the supporting schedule at C1, C2 and E1 and E2 of Section X.

6.9.2 The Bidder shall prepare the bid based on details provided in the tender documents. It must be clearly understood that the scope of work is intended to give the bidder an idea about the order and magnitude of the work and is not in any way exhaustive and guaranteed by ANIIDCO. The Bidder shall carry out all the tasks in accordance with the requirement of the tender documents & due diligence and it shall be the responsibility of the Bidder to fully meet all the requirements of the tender documents. If during the course of execution of the project, if any revision to the work requirements like technical specifications, equipment sizing etc. are to be made to meet the goals of ANIIDCO, all such changes shall be carried out within the current price. However, in case ANIIDCO suggest changes in the technical solution, then ANIIDCO shall bear the additional cost.

6.10 Firm Prices

6.10.1 Prices quoted in the bid must be firm and final and shall not be subject to any upward modifications, on any account whatsoever. However, ANIIDCO reserves the right to negotiate the prices quoted in the bid to effect downward modification.

6.10.2 The Financial bid should clearly indicate the price to be charged without any qualifications whatsoever and should separately indicate the unit price with tax and without tax. It is mandatory that such charges wherever applicable/payable should be indicated separately in ***Section X – Format 2: Breakdown of Cost Components.*** ANIIDCO shall make payment for taxes and duties at actual against submission of documentary proof.

6.10.3 Prices in any form or by any reason before opening the financial bid should not be revealed, failing which the offer shall be liable to be rejected. If price change is envisaged due to any clarification, revised Bid in a separate sealed cover shall be submitted with prior written permission of ANIIDCO.

6.11 Bid Currencies

Prices shall be quoted in Indian Rupees (INR).

6.12 Bidder Qualification

6.12.1 The “Bidder” as used in the tender documents shall mean the one who has signed the Tender Form. The Bidder may be either the Principal Officer or his duly Authorized Representative, in either cases he / she shall submit a certificate of authority. All certificates and documents (including any clarifications sought and any subsequent correspondences) received hereby, shall, as far as possible, be furnished and signed by the representative and the principal.

6.12.2 It is further clarified that the individual signing the tender or other documents in connection with the tender must certify whether he/she signs as the Constituted attorney of the firm or a company.

6.12.3 The authorization shall be indicated by written power-of-attorney accompanying the Pre qualification bid.

6.13 Bid Security (Earnest Money Deposit)

- **Amount of Bid Security (EMD)**

  The Bidder shall furnish, as part of its bid, a bid security in the form of Demand Draft / Bank Guarantee issued by any nationalized / scheduled bank located in India , of **Rupees 9,00,00,000/- (Rupees nine crore only)** pledged in favor of "ANIIDCO ltd" payable at Port Blair. This shall be valid for a period of 6 months from the date of opening of the prequalification bid and no interest shall be paid on the earnest money under any circumstances. In case a BG is submitted, the BG should be in force for 60 days post the Bid validity period.

- **Currency of Bid Security**

  The bid security shall be furnished in **Indian Rupees (INR)**.

- **Rejection of Bid**

  Any bid not secured in accordance with above mentioned clause, shall be rejected by ANIIDCO as being non-responsive, without any further correspondence.

- **Discharge of Bid Security of Unsuccessful Bidder**

  Unsuccessful bidders' bid security will be discharged / returned as promptly as possible by ANIIDCO.

- **Discharge of Bid Security of Successful Bidder**

  Earnest Money Deposit furnished by Bidders shall be refunded to Bidders after submission of performance guarantee by the successful bidder as per Section 6.25.

- **Forfeiture of Bid Security**

  The Bid Security can be forfeited if a Bidder

  - Withdraws its bid during the period of bid validity specified by the Bidder on the Bid Form or
  - During the bid process, if a Bidder indulges in any such deliberate act as would jeopardize or unnecessarily delay the process of bid evaluation and finalization. The

decision of ANIIDCO regarding forfeiture of the Bid Security shall be final & shall not be called upon question under any circumstances.

- During the bid process, if any information found wrong / manipulated / hidden in the bid. The decision of ANIIDCO regarding forfeiture of the Bid Security and rejection of bid shall be final & shall not be called upon question under any circumstances.

6.14 Bid Validity Period

6.14.1 Period of Validity of Bids

Bids shall remain valid for 180 days after the date of opening of Technical Bids prescribed by ANIIDCO. **A bid valid for a shorter period may be rejected as non-responsive**.

6.14.2 Extension of Period of Validity

In exceptional circumstances, ANIIDCO may request the Bidder(s) for an extension of the period of validity. The request and the responses thereto shall be made in writing (or by fax). The validity of EMD shall also be suitably extended.

6.15 Local / Site Conditions

6.15.1 It will be incumbent upon each Bidder to fully acquaint himself with the local conditions and other relevant factors at the proposed sites, which would have any effect on the performance of the contract and / or the cost. The Bidders are advised to visit the proposed ANIIDCO location (at its own cost) and due-diligence should be conducted before the pre-bid meeting/ bid-submission.

6.15.2 The Bidder is expected to make a site visit to the proposed site to collect all information that may be necessary for preparing the bid and entering into contract. Obtaining such information shall be at Bidder's own cost.

6.15.3 Failure to obtain the information necessary for preparing the bid and/or failure to perform activities that may be necessary for the providing services before entering into contract will in no way relieve the successful Bidder from performing any work in accordance with the Tender documents.

6.15.4 It will be imperative for each Bidder to fully inform themselves of all legal conditions and factors which may have any effect on the execution of the contract as described in the bidding documents. **ANIIDCO shall not entertain any request for clarification from the Bidder regarding such conditions.**

6.15.5 It is the responsibility of the Bidder that such factors have properly been investigated and considered while submitting the bid proposals and that no claim whatsoever including those for financial adjustment to the contract awarded under the bidding documents will be entertained by ANIIDCO and that neither any change in the time

schedule of the contract nor any financial adjustments arising thereof shall be permitted by ANIIDCO on account of failure of the Bidder to appraise themselves of local laws and site conditions.

6.16 Modification and Withdrawal of Bids

6.16.1 Written Notice

The Bidder may modify or withdraw its bid after the bid's submission, provided that ANIIDCO receives written notice of the modification or withdrawal, prior to the last date prescribed for receipt of bids.

6.16.2 Signing and Marking of Notice

The Bidder's modification or withdrawal notice shall be prepared, sealed, marked and dispatched in accordance with the provisions said earlier. A withdrawal notice may also be sent by fax but followed by a signed confirmation copy, post marked not later than the last date for receipt of bids.

6.16.3 Last Date for Notice

No bid may be altered / modified subsequent to the closing time and date for receipt of bids. Unsolicited correspondences from Bidders will not be considered. No bid may be withdrawn in the interval between the last date for receipt of bids and the expiry of the bid validity period specified by the Bidder in the Bid. Withdrawal of a bid during this interval may result in the Bidder's forfeiture of its EMD.

6.17 Opening of Pre Qualification and Technical Bids

6.17.1 Opening of Bids

An evaluation committee has been formed for evaluation of the bids. Decision of the committee would be final and binding upon all the Bidders. ANIIDCO will first open the Pre Qualification Bid, in the presence of the representatives of the Bidders who choose to attend, at the time, date and place, as mentioned in section 'Key Events & Dates'. In the event of the specified date of Bid opening being declared a holiday for ANIIDCO, the Bids shall be opened at the appointed time and location on the next working day. It is, therefore, advised to send a responsible, authorized and senior representative so that clarifications, if any, can be given on the spot. The Bidder's names, modifications, bid withdrawals and the presence or absence of the requisite EMD and such other details considered appropriate will be announced at the bid opening.

6.17.2 Evaluation of Pre Qualification and Technical Bid

The evaluation process of the tender, proposed to be adopted by ANIIDCO is indicated under this clause. The purpose of this clause is only to provide the Bidders an idea of the evaluation process that ANIIDCO may adopt. However, ANIIDCO reserves the right to modify the evaluation process at any time during the Tender process, without assigning any reason, whatsoever and without any requirement of intimating the Bidders of any such change.

6.17.2.1 Evaluation of Pre Qualification Bid

- Bidders need to fulfill all the pre-qualification conditions mentioned in Section II. ANIIDCO will examine the bids to determine whether they are complete, whether the bid format confirms to the Tender requirements, whether any computational errors have been made, whether required EMD has been furnished, whether the documents have been properly signed, and whether the bids are generally in order.
- A bid determined as not substantially responsive will be rejected by ANIIDCO and may not subsequently be made responsive by the Bidder by correction of the nonconformity.
- ANIIDCO may waive any informality or non-conformity or irregularity in a bid which does not constitute a material deviation, provided such waiver does not prejudice or affect the relative ranking of any Bidder.

6.17.2.2 Evaluation of Technical Bid

- Firstly the pre qualified bidders' technical bid document will be evaluated as per the requirements specified in the RFP and adopting the evaluation criteria spelt out in Section 6.18.2.
- ANIIDCO may request the bidders to make a presentation on their proposal to an Evaluation Committee to be constituted for the purpose.
- **All the bidders who meet the technical criteria shall be declared as technically qualified.** The financial bids of only the technically qualified bidders will be opened for further processing.
- In order to assist in the examination, evaluation and comparison of Bids, ANIIDCO may at its discretion ask the Bidder for a clarification regarding its Bid. The clarification shall be given in writing immediately, but no change in the price shall be sought, offered or permitted. **However, while giving a clarification, a Bidder may offer a higher specification or model without any impact on Financial Bid to be opened subsequently.**

- ANIIDCO may waive any informality or non-conformity or irregularity in a bid which does not constitute a material deviation , provided such waiver does not prejudice or affect the relative ranking of any Bidder

6.17.3 Announcement of Bids

The bidders' names, bid modifications or withdrawals and such other details as ANIIDCO at discretion may consider appropriate, will be announced at the bid opening.

6.17.4 Bids Not Considered For Evaluation

Bids that are rejected during the bid opening process due to incomplete documentation or late receipt shall not be considered for further evaluation.

6.18 Criteria for Evaluation of Bids

- A three-stage procedure will be adopted for evaluation of proposals, with the pre qualification being completed before the technical evaluation and thereafter financial proposals being opened and compared. Pursuant to the pre-qualification criterion bidders will be short-listed for technical bid. Technical bids will be opened only for the bidders who succeed the pre-qualification criterion. The technical bids for the disqualified bidders will be returned unopened at the address mentioned on the envelopes containing the technical bid.
- ANIIDCO will review the technical bids of the short-listed bidders to determine whether the technical bids are substantially responsive. Bids that are not substantially responsive are liable to be disqualified.
- ANIIDCO will evaluate the bids on the basis of meeting the criteria as described below. The financial bids for the technically qualified bidders will then be opened and reviewed to determine whether the commercial bids are substantially responsive.
- Conditional bids are liable to be rejected.

6.18.1 Criteria for Evaluation and Comparison of Pre qualification Bids

A consortium of companies duly backed up by an Agreement (to be submitted along with Pre-Qualification bid) is also eligible to participate subject to the following two conditions and satisfaction of the Tender Evaluation Committee during the evaluation of the tender. In the event of consortium being unacceptable to ANIIDCO, the Prime Bidder may be given an option of going on its own:

- The bidder (the prime bidder in case of consortium i.e. one of the member of the consortium that is nominated as the prime bidder by all the other members of the consortium) of this consortium shall be liable for adherence to all provisions of this Agreement.

- The consortium will draw upon human, technical and other resources of all the members during implementation and maintenance of the ANIIDCO Project. The Technical Bid shall include exact details in this regard, so that a consortium is not artificially created only to improve the score in Technical Bid.

  Terms and conditions applied in case of consortium defined in Annexure –1

  The Pre Qualification proposal will be evaluated using the checklist given in Section 2

6.18.2 Criteria for Evaluation of Technical Bids

The evaluation of technical bid will be done for the purpose of compliance on the basis of following criteria:

Sl. No.	Particulars	Documents to be submitted
1	Detailed design and architecture offered for undersea cable system and landing stations.	Section IX Format 2
2.	Layout plans for undersea cable system	Section IX Format 3
3.	Products specifications, make and bill of material for equipment offered for the undersea cable system and landing stations	Section IX Format 4
4.	Project Implementation schedule	Section IX Format 5
5.	Operation and Maintenance plan	Section IX Format 6
6.	Timeframe for obtaining permits by ANIIDCO and successful bidder	Section IX Format 7
7.	Acceptance Procedure/Test Plan	Section IX Format 8

Note: - In case of consortium roles and responsibilities of each partner has to be mentioned clearly in the implementation plan. The financial bids of only those bidders will be opened who meet the criteria.

6.18.3 Opening and Comparison of Financial Bids

Financial bids of those bidders who qualify the technical evaluation will be opened.

The quoted prices by bidder should be based on scope of the work as mentioned in Clause IV and major bidding parameter as per Schedule F. The major bidding parameter given in Schedule F is indicative and bidder has to submit their quote taking into account these parameters. However, during the execution of the project these parameters may change based on marine route survey.

The successful bidder shall be decided based on total price excluding all taxes of undersea cable system connecting six islands (CAPEX) plus discounted manpower cost and AMC charges for landing station after warranty period @ 10% as per Schedule A of Section X. Decision on executing optional locations shall be taken based on the quoted price as per the financial bid format in Schedule B.

6.19 Rectification of Errors

Arithmetical errors in the Financial Bid will be rectified on the following basis.

- If there is a discrepancy between the unit price and the total price that is obtained by multiplying the unit price and quantity, the unit price shall prevail and will be considered for future calculations.
- If there is a discrepancy between words and figures, the amount in words shall prevail.
- If the bidder does not accept the correction of errors, its bid will be rejected and its bid security may be forfeited.

6.20 Contacting ANIIDCO

6.20.1 Contact by Writing

No bidder shall contact ANIIDCO on any matter relating to its bid, from the time of bid opening to the time the Contract is awarded. If the Bidder wishes to bring additional information to the notice of ANIIDCO, it should be done in writing.

6.20.2 Rejection of Bid

Any effort by a Bidder to influence ANIIDCO in its decisions on bid evaluation, bid comparison or contract award may result in rejection of the Bidder's bid.

6.21 ANIIDCO's Right to Vary Scope of Contract at the time of Award

There shall not be any change in the scope of the contract except variation in quantity of undersea cable, terrestrial cable etc. due to site conditions or change in cable route due to physical survey at the time of execution of project subject to actual measurement.

6.22 ANIIDCO's Right to Accept Any Bid or to reject any or All Bids

- ANIIDCO reserves the right to accept any bid and to annul the Tender process and reject all bids at any time prior to award of Contract, without thereby incurring any liability to the affected Bidders or any obligation to inform the affected Bidders of the grounds for ANIIDCO's action.
- ANIIDCO reserves the right to negotiate the commercials with the selected Bidder and seek revised commercial bid.

6.23 Notification of Award

6.23.1 Notification to Bidder

Before the expiry of the period of validity of the proposal, ANIIDCO shall notify the successful Bidder in writing by registered letter or by fax, that its bid has been

accepted. The Bidder shall acknowledge in writing receipt of the notification of award and shall send his acceptance to enter into agreement within seven (7) days of receiving the notification.

6.23.2 Signing of Contract

The notification of the award shall constitute signing of the agreement. The signing of agreement will amount to award of contract and bidder will initiate the execution of the wok as specified in the agreement. At the same time as ANIIDCO notifies the successful Bidder that its bid has been accepted, ANIIDCO will send the Bidders the Proforma for Contract provided in the Tender Document, incorporating all agreements between the parties. Within 21 days of receipt of the Contract, the successful Bidder shall sign and date the Contract and return it to ANIIDCO.

6.23.3 Discharge of Bid Security

Upon the successful signing of the agreement, ANIIDCO shall promptly request the Bidder to provide performance guarantee pursuant to Section 6.25. On receipt of the performance guarantee, the bid security of all bidders will be released.

6.23.4 Expenses for the Contract

The incidental expenses of execution of agreement / contract shall be borne by the successful bidder.

6.24 Failure to abide by the Agreement

The conditions stipulated in the agreement shall be strictly adhered to and violation of any of the conditions will entail termination of the contract without prejudice to the rights of ANIIDCO with such penalties as specified in the Bidding document and the Agreement.

6.25 Bank Guarantee for Contract Performance

1. (A) Within 14 days after the receipt of notification of award from the Contract from ANIIDCO but before execution of Contract the successful bidder shall furnish Contract Performance Guarantee to ANIIDCO which shall be equal to 5 (five) % of the value of the Capital Cost (CAPEX), specific to each phase of such services.

   (B) Before expiry of warranty, the successful bidder shall furnish a Contract Performance Guarantee to ANIIDCO which shall be equal to 2.5 (two and half) % of the value of the capital cost (CAPEX) specific to each phase of such services valid for a period of five years two months and to be renewed consecutively for further period of five (5) years.

The successful Bidder shall furnish the performance security in accordance with the Terms & Conditions of Contract, in the Contract Performance Guarantee Bond prescribed at ***Annexure 5 – Proforma***.

2. Failure of the successful Bidder to comply with the requirement shall constitute sufficient grounds for the annulment of the award and forfeiture of the EMD. In case of exigency, if ANIIDCO gets the work done from elsewhere, the difference in the cost of getting the work done will be borne by the successful Bidder.

6.26 Confidentiality of the Document

This Tender Document is confidential and bidder shall ensure that anything contained in this Tender Document shall not be disclosed in any manner, whatsoever.

6.27 Rejection Criteria

Besides other conditions and terms highlighted in the tender document, bids may be rejected under following circumstances:

6.27.1 Pre Qualification Rejection Criteria

- Bids submitted without or with improper EMD.
- Bids which do not conform to unconditional validity of the bid as prescribed in the Tender.
- If the information provided by the Bidder is found to be incorrect / misleading at any stage / time during the Tendering Process.
- Any effort on the part of a Bidder to influence the bid evaluation, bid comparison or contract award decisions.
- Bids received by ANIIDCO after the last date prescribed for receipt of bids.
- Bids without signature of person (s) duly authorized on required pages of the bid
- Bids without power of authorization and any other document consisting of adequate proof of *the ability of the signatory to bind the Bidder.*

6.27.2 Technical Rejection Criteria

- Technical Bid containing financial details.
- Revelation of Prices in any form or by any reason before opening the Commercial Bid.
- Failure to furnish all information required by the RFP Document or submission of a bid not substantially responsive/compliance to the Tender Document in every respect.
- Bidders not quoting for the complete scope of Work as indicated in the Tender documents, addendum (if any) and any subsequent information given to the Bidder.

- Bidders not complying with the Technical and General Terms and conditions as stated in the RFP Documents.
- The Bidder not conforming to unconditional acceptance of full responsibility of providing services in accordance with the Scope of work and Service Level Agreements of this tender.
- If the bid does not confirm to the timelines indicated in the bid.
- Bids received without list of deviations

6.27.3 Financial Rejection Criteria

- Incomplete Price Bid
- Price Bids that do not conform to the Tender's price bid format.
- Total price quoted by the Bidder does not include all statutory taxes and levies applicable.

6.28 Concessions permissible under statutes

Bidder, while quoting against this tender, must take cognizance of all concessions permissible under the statutes including the benefit under Central Sale Tax Act, 1956, failing which it will have to bear extra cost where Bidder does not avail concessional rates of levies like customs duty, excise duty, sales tax, etc. ANIIDCO will not take any responsibility towards this. However, ANIIDCO may provide necessary assistance, wherever possible, in this regard.

6.29 Tax Liability

The bidder will have to bear all tax liability including octroi applicable in A&N Islands. However, ANIIDCO shall reimburse the payment for taxes and duties at actual against documents. However, applicable TDS shall be recovered/deducted from the payment release to the suppliers.

SECTION – VII

General Conditions of Contract

Section VII - General Conditions of the Contract

This CONTRACT is made and entered into on this ….. day of …….. by and between Andaman and Nicobar Islands Integrated Development Corporation Ltd, having its registered office at Vikas Bhawan, Port Blair, A & N Islands (herein after referred to as "ANIIDCO" which expression shall include its successors and assignees) on the one part and M/s ……., a company registered under the companies Act with its Registered office at …… referred to as the "Implementation Agency" (which expression shall include its successors, administrators, executors and permitted assignees) on the other part. For the purpose of this Contract, "ANIIDCO" and "Implementation Agency" shall be individually referred to as "Party", and collectively as "Parties".

Whereas, Andaman & Nicobar Administration, Government of India (hereinafter referred to as "A&N Administration" is desirous of laying dedicated undersea cable between mainland India by taking 02 branches from the existing undersea optical fiber cable called …. ("Main Cable"). The branches in conjunction with the Main Cable will provide connectivity to the Islands in a ring and managing the connectivity for 15 years commencing from the date of commissioning of Undersea Cable Project, in the manner more particularly specified in this Contract (the "Project").

And Whereas the Andaman and Nicobar Administration on its behalf, to act and deliver all required actions for implementation of the Project, has appointed ANIIDCO as the Nodal agency, including invitation of bids, award of contract, overseeing and monitoring the implementation of the Project.

And whereas the Implementation Agency represents that it has the necessary experience to implement and carry out the Project as referred to herein and has submitted a bid on …….. for the Project.

And whereas ANIIDCO has accepted the bid of the Implementation Agency and has placed Letter of Intent vide its letter No. …….. Dated …….. on the Implementation Agency and the acceptance of the same has been provided by Implementation Agency on …….

Now it is hereby agreed to by and between the parties as under:

7.1 Definitions

In this Contract, the following terms shall be interpreted as indicated:

7.1.1 Business Day" means any day that is not a Sunday or a public holiday as per the official holidays observed by A&N Administration.

7.1.2 "Confidential Information" for the purpose of this Contract shall mean:

(a) any and all information disclosed, furnished or communicated by or on behalf of the Disclosing Party or its Affiliate to the Receiving Party through the Receiving Party's directors, officers, employees, representatives, Affiliates or agents (collectively referred to as "Representatives") in connection with the Project, including without limitation, the existence and terms of this Contract, and the possible undertaking of the Project; and

(b) any and all information which is directly or indirectly received by the Receiving Party in connection with the Project.

but does not include information (i) which is or becomes public knowledge other than by a breach of this Contract; or (ii) which was previously known to the receiving Party free of any obligation to keep it confidential; or (ii) which is required to be disclosed pursuant to an order of the Court or under any applicable law, or an order/direction from any of the regulatory bodies.

All information, notes, analyses, compilations, studies, specifications, drawings or other documents produced, developed or compiled by the Receiving Party and/or its Representatives from the Confidential Information ("Derivatives") shall constitute Confidential Information and the obligations in this Contract in relation to Confidential Information shall apply to the Receiving Party in respect of the Derivatives.

The Party receiving the other Party's information shall be referred to as the "Receiving Party". The other Party shall be referred to as the "Disclosing Party".

7.1.3 **"Contract"** means this Agreement entered into between ANIIDCO and the "Implementation Agency" as recorded in this Contract signed by ANIIDCO and the "Implementation Agency" including all attachments and Annexures thereto, Service Level Agreement (SLA), all documents incorporated by reference therein and amendments and modifications to the above from time to time;

7.1.4 **"Implementation Agency's Representative"** means the person or the persons including supplier or vendor appointed and authorized by the Implementation Agency from time to time to act on its behalf for overall co-ordination, supervision and management of the Project .

7.1.5 **"Commissioning of Undersea Cable System"** means**,** supply, laying, installation, commissioning and testing of the required Undersea Cable System and equipment etc and getting the acceptance of the same from ANIIDCO in accordance with detailed testing and acceptance procedure mentioned in the clause 4.2.5 and 4.2.6 of RFP.

7.1.6 **"Effective Date"** means the date on which this Contract is signed and executed by the parties hereto. If this Contract is executed in parts, then the date on which the last of such Contracts is executed shall be construed to be the Effective Date;

7.1.7 **"Intellectual Property Rights"** means any patent, copyright, trademark, trade name, design, trade secret, permit, service marks, brands, propriety information, knowledge, technology, licenses, databases, computer programs, software, know how or other form of intellectual property right, title, benefits or interest whether arising before or after the execution of this Contract and the right to ownership and registration of these rights.

7.1.8 The **"Implementation Agency"** means the company with whom the order has been placed for providing Services as specified in this Contract and shall be deemed to include the Implementation Agency's permitted assigns, as the case may be, unless excluded by the terms of the Contract.

7.1.9 **"Parties"** means ANIIDCO and the Implementation Agency and **"Party"** means either of the Parties

7.1.10 "**Service**" means facilities/ services to be provided as per the requirements specified in the scope of work as set out in clause 7.4 of this Contract and any other incidental services, related to the scope of work, such as installation,

implementation, maintenance and provision of technical assistance and other such obligations of the Implementation Agency covered under this Contract and Service Level Agreement.

7.1.11 "**Site**" means the location/work site where Undersea Cable System is commissioned for the purposes of the Contract wherein the operations/services/facilities as specified in the Scope of Work are to be provided/ carried out.

7.1.12 "**Sub-Implementation Agency**" means any person or persons or firm/company or their legal representatives, successors, assignees to which part of the contract has been outsourced/ assigned by the Implementation Agency provided notice of the details and particulars of such legal representatives, successors and assignees are served upon ANIIDCO.

7.1.13 "**The Contract Price/Value**" means the price payable to the Implementation Agency under the Contract in accordance with the terms of the Contract.

7.1.14 "**SIA's Representative**" or "ANIIDCO's representative" shall mean the person appointed by the SIA or ANIIDCO from time to time to act on its behalf at the Site for overall coordination, supervision and project management at Site.

7.1.15 "**Bidder**" shall mean an Individual Company registered under the Companies Act 1956 or a Consortium of companies consisting of not more than three companies as defined in the Consortium, which participates in the bidding process.

7.1.16 "**Prime Bidder**" shall mean the Indian company of the Consortium, if a Consortium is a bidder incorporated under the Companies Act, 1956, which shall interface with the Government on behalf of the consortium, for the successful execution of the Project for the entire agreement period.

7.1.17 **"Undersea Cable System/Project"** shall mean design, supply, installation, commissioning of undersea cable and landing stations equipment, warranty etc. connecting A&N Islands with mainland India.

7.1.18 **"Operation and Maintenance"** shall mean operation and comprehensive maintenance of cable system and landing stations including spares, manpower, etc. for the period of 15 years after commissioning and as more specifically and

particularly detailed in the Operation and Maintenance Services Exhibit submitted by the Implementation Agency.

7.1.19 **"A&N Islands**" means Andaman and Nicobar Islands covering its entire territories.

7.1.20 **"Scope of Work**" - has its meaning as set out in clause 7.4 of this Contract.

7.1.21 **"Warranty Period"** shall mean Warranty Period for 5 years from the date of Commissioning of Undersea Cable System.

7.1.22 **"Condition Precedent"** has its meaning as set out in clause 7.2A of this Agreement.

7.2 Interpretation

In this Contract unless a contrary intention is evident:

7.2.1 The clause headings are for convenient reference only and do not form part of this Contract;

7.2.2 Unless otherwise specified a reference to a clause number is a reference to all of its sub-clauses;

7.2.3 Unless otherwise specified a reference to a clause, sub-clause or section is a reference to a clause, sub-clause or section of this Contract including any amendments or modifications to the same from time to time;

7.2.4 A word in the singular includes the plural and a word in the plural includes the singular;

7.2.5 A word importing a gender includes any other gender;

7.2.6 A reference to a person includes a partnership and a body corporate;

7.2.7 A reference to legislation includes legislation repealing, replacing or amending that legislation;

7.2.8 Where a word or phrase is given a particular meaning it includes the appropriate grammatical forms of that word or phrase which have corresponding meanings.

7.2.9 In the event of an inconsistency between the terms of this Contract and the Tender and the Bid, the terms of this Contract shall prevail.

7.2A **Conditions Precedent**

The conditions precedent required to be satisfied by the Implementation Agency prior to the execution of Contract shall be deemed to have been fulfilled when the Implementation Agency shall have:

a. Furnished performance guarantee bond from a Nationalized Bank to ANIIDCO Within 14 days of the receipt of notification of award as per clause 7.6.

b. Provided to the ANIIDCO, copies (certified as true by the Director of the Implementation Agency) of all resolutions adopted by the Board of Directors of the Implementation Agency authorizing the execution, delivery and performance of this Contract by the Implementation Agency.

c. Delivered to the ANIIDCO, a legal opinion from the legal counsel of the Implementation Agency with respect to the authority of the Implementation Agency to enter into this Contract and the enforceability of the provisions thereof.

7.3 Representations & Warranties

The Implementation Agency hereby represents and warrants the following:

7.3.1 That the Implementation Agency has the requisite experience in providing Undersea Cable System and maintenance services, the technical know-how and the financial wherewithal, the power and the authority that would be required to successfully provide the Services sought by ANIIDCO for the purposes of this Contract.

7.3.2 That the Implementation Agency is not involved in any major litigation or legal proceedings, pending, existing and potential or threatened that may have an impact of affecting or compromising the performance or delivery of Services under this Contract.

7.3.3 That the representations and warranties made by the Implementation Agency in the bid and in this Contract are true and correct and fulfill all the requirements as are necessary for executing the obligations and responsibilities as laid down in this Contract and the Tender and the Implementation Agency shall be bound by all the terms of the Bid and the Contract

7.3.4 That the Implementation Agency has access to the professional skills, personnel and resources/ authorizations that are necessary for providing all such Services as are necessary to fulfill the Scope of Work stipulated under this Contract.

7.3.5 All Intellectual Property Rights, including, also, without limiting the definition of Intellectual Property Rights, inventions (whether or not patentable), discoveries, improvements, trade secrets, know-how, designs, formulas, processes, techniques, algorithms, information, ideas, software, object code, source, code, computer programs, interfaces and/or other copyrightable subject matter (collectively, “Work Product”) created for ANIIDCO or in the course of implementation of the Project by the Implementation Agency or those engaged or working along with the Implementation Agency, either alone or in collaboration with third parties, shall be the

exclusive property of the Implementation Agency. ANIIDCO shall have the right to use the Work Product or any part or parts thereof as it sees fit, however, the Implementation Agency's products invention will always be the property of the Implementation Agency, which will be detailed/listed in the **Annexure ---- *]*.** ANIIDCO shall have the rights to use the Work Product including source code for the term of this Contract and on expiration or termination and Implementation Agency shall execute separate license agreement in favour of new Implementation Agency/ANIIDCO in such manner as may be required to carry on operation and maintenance. ANIIDCO will not use any Work Product including source code for any other purpose as agreed to between the parties. Further ANIIDCO shall take all measures to protect the Implementation Agency's Work Product. ANIIDCO shall not give the Implementation Agency's Work Product including source code to any third party for any reason whatsoever.

7.3.6 That the Implementation Agency shall use such assets of ANIIDCO as ANIIDCO may permit for the sole purpose of execution of its obligations under the terms of this Contract. The Implementation Agency shall however have no claim to any right, title, lien or other interest in any such property and any possession of property for any duration whatsoever and shall not create or attempt to create any right in equity or otherwise merely by fact of such use or possession during or after the term hereof.

7.3.7 Save and except the permissions and approvals to be obtained by ANIIDCO, the Implementation Agency shall procure all the necessary permissions, permits and required approvals from all appropriate authorities, Government (Central or State) for performing its obligations under this Contract. Similarly ANIIDCO shall procure the permissions, permits and approvals those are listed in **Annexure** _____. The list of permissions, permits and approvals to be obtained by the ANIIDCO and Implementation Agency is enclosed as **Annexure …..**

7.3.8 That the execution of the Project and the Scope of Work herein are and shall be in accordance and in compliance with all applicable laws and the Parties shall discharge their respective obligations and responsibilities in terms of this Contract to implement the Project.

7.3.9 That all Conditions Precedent as provided in clause 7.2A of the Contract has been satisfied.

7.3.10 That neither the execution and delivery by the Implementation Agency of the Contract nor the Implementation Agency's compliance with or performance of the terms and provisions of the Contract (i) will contravene any provision of any applicable law or any order, writ, injunction or decree of any court or Governmental Authority binding on the Implementation Agency, (ii) will conflict or be inconsistent with or result

in any breach of any of the terms, covenants, conditions or provisions of, or constitute a default under any contract or instrument to which the Implementation Agency is a party or by which it or any of its property or assets is bound or to which it may be subjected to or (iii) will violate any provision of the Memorandum and Articles of Association of the Implementation Agency.

7.3.11 That the Implementation Agency certifies that all registrations, recordings and filings, if any and notarizations of the Contract and payments of any tax or duty, which are required to be effected or made by the Implementation Agency and which is necessary to ensure the legality, validity, enforceability or admissibility in evidence of the Contract have been made.

7.3.12 That the Implementation Agency owns, has license to use or otherwise has the right to use, free of any pending or threatened liens or other security or other interests all its or its superior licensor's Intellectual Property Rights, which are required or desirable for execution of Project and performance of its Services under this contract. All Intellectual Property Rights (owned by the Implementation Agency or which the Implementation Agency is licensed to use) required by the Implementation Agency for the performance of the Contract are valid and subsisting.

7.3.13 The Implementation Agency shall at all times maintain sufficient manpower, resources and facilities to execute the Project and provide the Services as per Bid and the Contract.

7.3.14 Both parties represent and warrant that its security measures, policies and procedures are adequate to protect and maintain the confidentiality of the Confidential Information.

7.3.15 That in providing the Services or deliverables or materials, neither Implementation Agency nor its agent, nor any of its employees, shall utilize information which may be considered Confidential Information of or proprietary to any prior employer or any other person or entity unless they have the requisite permission to do so.

7.3.16 The Implementation Agency shall ensure that the supplied Undersea Cable System/equipments meets the security compliances and other requirements of Department of Telecommunication, Government of India (DOT) and also meets the requirements NLD License. The Implementation Agency shall have to be entered in to a separate Agreement with ANIIDCO to comply with NLD License condition issued by (DOT), as per template agreement of DOT.

7.4 Scope of Work / Contract

7.4.1 Scope of the Contract shall be as referred to in this Contract, Scope of Work as per the RFP and any corrigendum thereof released by ANIIDCO including specifications and drawings submitted by Implementing Agency and the service level agreement (referred to as "SLA" as per the RFP and any corrigendum thereof released by ANIIDCO).

7.4.2 ANIIDCO has engaged the Implementation Agency for plan, design, site preparation, supply, installation, commissioning, operations and maintenance including fault management for the establishment of Undersea Cable System. The Implementation Agency is required to provide such services, support and infrastructure within the Scope of Work as are necessary during the term of this Contract and includes all such processes and activities which are consistent with the proposals set forth in the Bid, the Tender and this Contract and are deemed necessary by ANIIDCO in order to fulfill and perform its Scope of Work (hereinafter 'Scope of Work').

7.4.3 If any services, functions or responsibilities not specifically described in this Contract are an inherent, necessary or customary part of the Services or are required for proper performance or provision of the Services in accordance with this Contract, they shall be deemed to be included within the Scope of Work to be delivered free the charges, as if such services, functions or responsibilities were specifically described in this Contract.

7.4.4 ANIIDCO reserves the right to amend any of the terms and conditions in relation to the Scope of Work and may issue any such directions which are not necessarily stipulated therein if it deems necessary for the fulfillment of the Scope of Work pursuant to Clause 7.20 and such amendment shall be effected by mutual agreement.

7.5 Duration of the Contract

The CONTRACT will be effective from the Effective Date of Contract and shall remain valid for a period of 15 (fifteen) years from the date of Commissioning of Undersea Cable System. However, the contract can be further extended for a period of 10 (ten) years on mutually agreed terms and conditions.

7.6 Contract Performance Guarantee

7.6.1 Within 14 days after the receipt of notification of award from ANIIDCO but before the execution of Contract the successful Bidder/Implementation Agency shall furnish

Contract Performance Guarantee Bond of a Nationalized Bank to ANIIDCO, which shall be equal to 5 (five)% of the value of the Undersea Cable Project (CAPEX) specific to each phase of such services for a period up to warranty period (i.e. 15 month/20month plus 5 years two months), as per format prescribed at Annexure – 5: Proforma.

7.6.2 Before expiry of warranty period, the Implementation Agency shall furnish Contract Performance Guarantee to ANIIDCO, which shall be equal to 2.5 (two and half) % of the value of the Undersea Cable Project (CAPEX) specific to each phase of such services valid for a period of five years two months and to be renewed consecutively for further period of five (5) year, as per format prescribed at Annexure – 5: Proforma.

7.6.3 ANIIDCO agrees that Contract Performance Guarantee/Bank guarantee so to be furnished by Implementation Agency in terms of this Contract and Bid shall be invoked by ANIIDCO only in terms of the Contract.

7.7 Implementation Agency's Obligations

7.7.1 The Implementation Agency would be required to develop, maintain and manage the proposed Undersea Cable System and provide Services in accordance with the terms of this Contract and also in accordance with SLA as set forth under **Annexure – .....** of this Contract.

7.7.2 In addition to the aforementioned, the Implementation Agency shall:

7.7.2.1 Execute the Project and perform the Services specified in the Scope of Work and make available the necessary equipment / facilities / services as may be necessary to fulfill and perform 'Scope of Work' requirements.

7.7.2.2 The Implementation Agency shall ensure that the Implementation Agency's Team is competent, professional and possesses the requisite qualifications and experience appropriate to the task they are required to perform under this Contract. The Implementation Agency shall ensure that the Services are performed through the efforts of the Implementation Agency's Team, in accordance with the terms agreed between Implementation Agency and ANIIDCO. The Implementation Agency shall be liable for any non-performance, non-compliance, breach or other loss and damage resulting directly by or on account of Implementation Agency or Implementation Agency's Representative or any person on behalf of Implementation Agency in execution of this Contract.

7.7.2.3 In case of fault due to Force Majeure, the Implementation Agency shall make its best effort to restore the fault within the time frame as mentioned in the SLA, and cost of the same shall be reimbursed by ANIIDCO to Implementation

Agency upon receipt of Invoice from Implementation Agency in terms of this Contract.

7.7.3 The Implementation Agency's Representative shall have all the powers requisite for the performance of Services under this Contract. The Implementation Agency' representative shall liaise with ANIIDCO's Representative for the proper co-ordination and timely completion of the Project and Services or matters incidental or necessary for the performance of Services. The Implementation Agency will extend full co-operation to ANIIDCO's representative in the manner required by them for supervision/ inspection/ observation of the Undersea Cable System, equipment/material, procedures, performance, reports and records pertaining to the Project and Services. They will extend full co-operation to ANIIDCO's Representative in the manner required by them for supervision/ inspection/observation of the Undersea Cable System, equipment/material, procedures, performance, reports and records pertaining to the Project and Services. They shall also have complete charge of the Implementation Agency's Representative engaged in the performance of the Services and to ensure internal discipline, compliance of rules, regulations and safety practice.

7.7.4 **Reporting Progress**:

7.7.4.1 Implementation agency shall monitor progress of all the activities specified in the Contract and submit free of cost monthly progress report to ANIIDCO. ANIIDCO, on mutual agreement between both Parties, may change the periodicity of such reports. Extracts of the progress report to be termed, as "Executive Summary" shall be submitted in 3 copies, along with 3 copies of monthly progress report. The same is required to be submitted in soft copy as well.

7.7.4.2 The Services and/or labor to be provided by the Implementation Agency under the Contract and the manner and speed of execution and maintenance of the work ("Work Schedule") are to be conducted in a manner to the satisfaction of ANIIDCO's Representative in accordance with the Contract. The Work Schedule is provided in **Annexure -** …….. Should the rate of progress of the work compliance to the requirements of the Project, its facilities or any part of them at any time fall behind the Work Schedule as per SLA for reasons other than Force Majeure circumstances or caused by or attributable to ANIIDCO, ANIIDCO's Representative shall notify the Implementation Agency in writing.

7.7.4.3 The Implementation Agency shall reply to the written notice giving details of the measures it proposes to take to expedite the progress so as to complete the works with the Work Schedule. The Implementation Agency shall not be entitled to

any additional payment for taking such steps. If at any time it appears to ANIIDCO or ANIIDCO's Representative that the actual progress of work does not conform to the approved programme, the Implementation Agency shall produce, at the request of ANIIDCO's Representative, a revised programme showing the modification to the approved programme necessary to ensure completion of the works within the Work Schedule or steps initiated to ensure compliance/ improvement to the stipulated requirements

7.7.4.4 The Implementation Agency shall execute the Project in terms of this Contract in the following two phases:

Phase I - Port Blair
Phase II - Other Islands

The time frame for completion of the Project is 15 month for Phase I commencing from _____ (Port Blair) and 20 months for Phase II (other islands) commencing from _____. In case during the execution of Undersea Cable System the progress falls behind schedule or does not meet the desired requirements, Implementation Agency shall deploy extra manpower, resources and infrastructure to make up the progress or to meet the requirements. Programme for deployment of extra man power/ resources/ infrastructure will be submitted to ANIIDCO for its review and approval, which approval shall not be unreasonably withheld. All time and cost effect in this respect shall be borne by the Implementation Agency unless otherwise expressly provided in the Contract, failing which ANIIDCO may impose penalty on Implementation Agency as per clause 7.29 of the contract.

7.7.4.5 The Implementation Agency shall notify the ANIIDCO in writing of all sub-contracts/assignment awarded under this Contract if not already specified in the Bid. However, such notification, in this original bid or later shall not relieve the Implementation Agency from any liability or obligation under the Contract.

7.7.5 **Knowledge of Site Conditions**:

7.7.5.1 The Implementation Agency's undertaking for executing the Project in terms of this Contract shall be deemed to mean that the Implementation Agency possesses the knowledge of all Undersea Cable System related requirements as stipulated in the Bid, Tender Document and this Contract including but not limited to environmental, demographic and physical conditions relating to Undersea Cable System and all criteria required to meet the design of the Undersea Cable System.

7.7.5.2 The Implementation Agency shall be deemed to have understood the requirements and have satisfied itself with the Scope of Work contained in this Contract, bidding documents, nature and type of the works and materials necessary for the completion of the Project, etc. and in- general to have obtained itself necessary information of all risks, contingencies and circumstances affecting its obligations and responsibilities therewith under the Contract and its ability to perform it.

7.7.5.3 Implementation Agency shall be deemed to have satisfied itself as to the correctness and sufficiency of the Contract Price for the Project. The consideration provided in the Contract for the Implementation Agency's undertaking the works shall cover all the Implementation Agency's obligations and responsibilities and all matters and things necessary for proper execution of the Project and maintenance of the Services in accordance with the Contract and for complying with any instructions which ANIIDCO's Representative may issue in connection therewith and of any proper and reasonable measures which the Implementation Agency takes in the absence of specific instructions from ANIIDCO's Representative.

7.8 Implementation Agency's Team

7.8.1 The Implementation Agency shall supply to ANIIDCO 05 (five) days prior to the effective date, an organization chart showing the proposed organization/ manpower to be established by the Implementation Agency for execution of the Project/facilities including the identities and Curriculum-Vitae of the key personnel to be deployed. The Parties shall identify the key personnel under **Annexure ____** of this Contract ("Key Personnel") The Implementation Agency shall promptly inform ANIIDCO in writing of any revision or alteration of such organization charts.

7.8.2 The Implementation Agency shall be responsible for the deployment, transportation, accommodation and other requirements of all its employees required for the execution of the Project and for all costs/charges incurred in connection therewith till the date of acceptance.

7.8.3 The Implementation Agency shall provide and deploy manpower for carrying out the Project, only those manpower resources who are skilled and experienced in their respective fields and who are competent to execute or manage/supervise the Project in a proper and timely manner.

7.8.4 ANIIDCO's Representative may at any time object to and require the

Implementation Agency to remove forthwith from the site a supervisor or any other authorized representative or employee of the Implementation Agency or any person(s) deployed by Implementation Agency or its Sub-Implementation Agency, if in the opinion of ANIIDCO's Representative, the person behaved in an unethical manner. The Implementation Agency shall forthwith remove and shall not again deploy the person in question at the site without the written consent of ANIIDCO's Representative.

7.8.5 ANIIDCO's Representative may at any time request the Implementation Agency to remove from the work/site the Implementation Agency's supervisor or any other authorized representative including any employee of the Implementation Agency or its Sub-Implementation Agency or any person(s) deployed by Implementation Agency or its Sub-Implementation Agency for professional incompetence or gross negligence, fraud or willful misconduct.

7.8.6 ANIIDCO Representative shall state to the Implementation Agency in writing the reasons for any request or requirement pursuant to Clause 7.8.4 and 7.8.5.

7.8.7 The Implementation Agency shall maintain backup personnel and shall promptly provide replacement for every person removed pursuant to this section with an equally competent substitute from the pool of backup personnel.

7.8.8 In case of change in its team composition owing to attrition the Implementation Agency shall ensure a reasonable amount of time-overlap in activities to ensure proper knowledge transfer and handover/takeover of Document and other relevant materials between the outgoing and the new member. The exiting team member should be replaced with an equally competent substitute from the pool of backup personnel.

7.9 Statutory Requirements

7.9.1 During the tenure of this Contract nothing shall be done by the Implementation Agency or ANIIDCO in contravention of any applicable law, act and/or rules/regulations, there under or any amendment thereof governing inter-alia customs, stowaways, foreign exchange, license conditions of Department of Telecommunications etc. or any Notifications/Directions/Orders issued by Government or any authority in relation to the Project and Services, Implementation Agency and ANIIDCO shall keep each other indemnified in this regard.

7.9.2 The Implementation Agency shall provide the names and number of employees, who would carry out the work and the monthly statement of EPF deposit along with EPF registration number.

7.10 Contract Administration

7.10.1 Either party may appoint any individual/organization as their authorized representative through a written notice to the other party. Each representative shall have the authority to:

7.10.1.1 Exercise all of the powers and functions of its Party under this Contract other than the power to amend this Contract and ensure the proper administration and performance of the terms hereof and

7.10.1.2 Bind its Party in relation to any matter arising out of or in connection with this Contract.

7.10.2 The Implementation Agency along with the members of Sub-Implementation Agency/third party shall be bound by all undertakings and representations and any covenants stipulated hereunder with respect to this Contract for and on their behalf.

7.10.3 For the purpose of execution or performance of the obligations by Implementation Agency under the Tender, Bid and this Contract, ANIIDCO's Representative would act as an interface with the nominated representative of the Implementation Agency. The Implementation Agency shall comply with any instructions that are given by ANIIDCO's Representative during the course of this Contract in relation to the performance or obligations of Implementation Agency under the terms of this Contract.

7.10.4 A Committee comprising of ANIIDCO's Representatives and the Implementation Agency shall meet on a monthly basis to discuss any issues / bottlenecks being encountered. The Implementation Agency shall draw the minutes of these meetings and circulate to ANIIDCO.

7.11 Right of Monitoring, Inspection and Periodic Audit

7.11.1 ANIIDCO shall also have the right to conduct, either by itself or through any Third Party as it may deem fit, an audit / assessment except the inspection of books of account and personal records to monitor the performance of the obligations/ functions of Implementation Agency in accordance with the terms of this Contract and SLA and the Implementation Agency shall provide ANIIDCO with the reports as specified in Section 4.3.3 of RFP including specified daily, weekly or monthly reports enabling ANIIDCO to inspect and monitor the Project and Implementation Agency's performance of its obligations and functions including quality assurance in accordance with the terms of this Contract. Any deviation or contravention identified ANIIDCO as a result of such audit/assessment

inspection would need to be rectified by the Implementation Agency failing which ANIIDCO may without prejudice to any other rights that may be available to ANIIDCO under the law issue a notice of default.

7.11.2 Implementation Agency shall have to give an access to the Network Management System (NMS) console (pertaining to Undersea Cable System) and /or Helpdesk Console and /or reporting tools (Availability and Performance) to ANIIDCO or its designated agency such as TPA during the contract period as and when required. This will be required for the purpose of service level and other operational requirements related to payment and project obligations.

7.12 ANIIDCO's Obligations

7.12.1 ANIIDCO's Representative shall interface with the Implementation Agency to provide the required information, clarifications, and to resolve any issues as may arise during the execution of the Contract. ANIIDCO shall provide adequate co-operation in providing details assisting with coordination and for obtaining approvals from various governmental agencies or any other authority, in cases, where the intervention of ANIIDCO is proper and necessary.

7.12.2 ANIIDCO shall ensure that timely approval is provided to the Implementation Agency, where deemed necessary, which should include physical Undersea Cable System diagram/plans and all specifications related to equipment/material required to be provided as part of the Scope of Work.

7.12.3 ANIIDCO shall be solely responsible for the content of the voice and data transmitted and carried through the resources/Services provided by the Implementation Agency and ANIIDCO shall use the same in accordance with all applicable statutory or regulatory rules, regulations and guidelines. ANIIDCO shall not use the resources for sending any data or messages which is/are offensive, abusive, indecent and obscene or in violation of any applicable law. ANIIDCO shall be solely liable and responsible for any breach of the aforesaid obligation(s) and no liability arising from such breach shall fasten on the Implementation Agency.

7.12.4 ANIIDCO shall not directly or indirectly reproduce, distribute, publish, copy, download or otherwise exploit any content belonging to a third party, which is protected by copyright or other intellectual property rights, unless the ANIIDCO owns or controls the relevant rights thereto or has obtained all the requisite licenses and approvals in connection with such use.

7.12.5 ANIIDCO shall not modify, rearrange, disconnect, remove, relocate, replace or permit any of its employees or agents or third party to modify, rearrange, disconnect, remove, relocate or replace the network installed by the Implementation Agency.

7.12.6 ANIIDCO in its name and at its cost and expenses shall procure all the necessary permits, licenses or authorities as agreed by it in relation to the Project which is listed at Annexure - ……. Mobilization of ship for marine installation to be decided between ANIIDCO and successful bidder after award of work taking into account marine survey and clearance/permit to be obtained for implementation of the project. In case, there is any delay on the part of ANIIDCO for obtaining permits/clearance under the contract, the successful bidder shall be granted extension of time for any such delay.

7.12.7 It will be the responsibility of the Implementation Agency for arrangement of raw power and diesel required for the operation of backup DG Set to be installed at various landing stations. ANIIDCO shall however provide necessary assistance to the Implementation Agency in getting raw power connection and diesel supply. The cost of diesel consumed for backup DG set and electricity charges shall be paid directly on actual basis.

7.12.8 ANIIDCO shall pay all payment to Implementation Agency within 45 days from its due date as per payment terms of this Contract and shall also reimburse the payment for taxes and duties which Implementation Agency will be liable to pay at actual against documents provided however if it appears to ANIIDCO that taxes and duties imposed is on the higher side or not in accordance with the law, upon intimation being given to Implementation Agency by ANIIDCO. Implementation Agency shall take necessary steps for relief and remedy on the issues from the appropriate forum.

7.12.9 The ANIIDCO shall provide building/space required for construction of landing stations.

7.12.10 ANIIDCO shall ensure inspection of undersea cable system by third party within 03 (three) weeks of intimation from the bidder.

7.13 Information Security

7.13.1 Neither the Implementation Agency nor ANIIDCO shall carry and/or transmit any material, information, layouts, diagrams, storage media or any other goods/material in physical or electronic form, which are proprietary to or owned either by ANIIDCO or Implementation Agency, without prior written permission from either ANIIDCO or Implementation Agency, as the case may be.

7.13.2 The Implementation Agency shall adhere to the Information Security policy developed/required by Department of Telecommunication, Government of India and specifically mentioned in the Agreement between ANIIDCO and Implementation Agency as per clause 7.3.16 of this Contract. For the purpose of this clause 7.13,

the party receiving the other party's information shall be referred to as the "Receiving Party". The party disclosing the Confidential Information shall be referred to as the Disclosing Party.

7.13.3 The Receiving Party agrees to hold and keep in strictest confidence any and all Confidential Information.

7.13.4 The Receiving Party shall take all steps and measures to minimise the risk of disclosure of the Confidential Information by ensuring that only such representatives who are directly involved in the Project and whose duties require them to possess the Confidential Information shall have access to the Confidential Information on a need to know basis. The Receiving Party shall ensure that its representatives comply with the confidentiality obligations contained in this Contract. In any event, the Receiving Party shall be responsible for any breach of this Contract by any of its representatives and shall take all measures (including but not limited to court proceedings) to restrain such representatives from prohibited or unauthorised disclosure or use of the Confidential Information.

7.13.5 Nothing in this Contract shall be construed as granting expressly or by implication during the tenure of this Contract or thereafter, any transfer, assignment, licence or any other rights in respect of any licence, patent, copyright or any other industrial or intellectual property right in force and belonging to the Disclosing Party which rights shall remain vested in and the absolute property of the Disclosing Party.

7.13.6 In the event the Receiving Party or any of its Representatives is obliged to disclose any Confidential Information as a result of a court order or pursuant to any governmental/regulatory action, the Receiving Party shall immediately inform, to the extent reasonably feasible, the Disclosing Party so that the Disclosing Party is given an opportunity to object to such disclosure. Should any such objection by the Disclosing Party be unsuccessful, the Receiving Party or its Representative(s) so obliged to disclose Confidential Information may disclose only such Confidential Information to the extent required by the relevant court order or governmental/regulatory action

7.13.7 The Receiving Party agrees that it will promptly on request by the Disclosing Party at any time either:

(a) return any and all Confidential Information to the Disclosing Party; or

(b) destroy all such Confidential Information and confirm in writing within seven (7) days of such destruction

7.13.8 The Receiving Party shall immediately advise the Disclosing Party of any unauthorised disclosure, misappropriation or misuse by any person of any

Confidential Information, upon the Receiving Party having knowledge of the same.

7.14 Ownership of Undersea Cable System

ANIIDCO shall be owner of the Undersea Cable System commissioned by the Implementation Agency.

7.15 Risk Management

7.15.1 The Implementation Agency shall at his own expense adopt suitable risk management methodology to mitigate all risks assumed by the Implementation Agency under this Contract. Implementation Agency shall underwrite all the risk related to its personnel deputed under this Contract as well as equipment, tools and other components of ANIIDCO, procured for ANIIDCO, equipment, tools and any other belongings of the Implementation Agency or their personnel during the entire period of their engagement in connection with this Contract and take all essential steps to reduce and mitigate the risk. ANIIDCO will have no liability or obligation on this account.

The Implementation Agency will cover the aforesaid risk by taking appropriate/ proper insurance cover under intimation to ANIIDCO.

7.15.2 ANIIDCO may obtain insurance to cover risk in respect of Undersea Cable System after acceptance testing from the date of Commissioning of the Undersea Cable System.

7.16 Indemnity

7.16.1 The Implementation Agency shall indemnify ANIIDCO from and against any costs, loss, damages, expense, or liabilities of any kind howsoever suffered, or incurred by ANIIDCO inter alia during and after the Contract period arising out of any third party claims against ANIIDCO due to:

7.16.1.1 Any negligence or wrongful act or omission by the Implementation Agency or the Implementation Agency's Team or any Sub-Implementation Agency engaged by Implementation Agency in connection with or incidental to this Contract; or

7.16.1.2 Injuries to or death of any persons; which result directly from the activities of the Implementation Agency, its sub-contractors, or agents in the execution of the Contract.

7.16.3 ANIIDCO shall:

a) Provide written notice to the Implementation Agency of all such third party claims upon it becoming aware thereof;

b) At ANIIDCO's own discretion permit the Implementation Agency to assume the sole defence of and to settle such third party claims or suits, and shall, upon the

Implementation Agency's request and at the Implementation Agency's expense, furnish all information and reasonable assistance to assist the Implementation Agency in the defence or settlement of the same.

7.17 Confidentiality

7.17.1 The Implementation Agency shall not use any Confidential Information (Including but not limited to data, CCTV records, Biometric Records etc) belonging to ANIIDCO, the name or the logo of ANIIDCO except for the purposes of providing Service as specified under this contract;

7.17.2 The Implementation Agency may only disclose Information in the following circumstances:

7.17.2.1 With the prior written consent of ANIIDCO.

7.17.2.2 To a member of the Implementation Agency's Team, Sub-Implementation Agency, Implementation Agency and its Affiliates' employees and consultants. ("Authorized Person") if:

7.17.2.2.1 The Authorized Person needs the Information for the performance of obligations under this Contract;

7.17.2.2.2 The Authorized Person is aware of it and is obliged to use Information only for the performance of obligations under this Contract

7.17.3 The Implementation Agency shall do everything reasonably possible to preserve the confidentiality of the ANIIDCO's Confidential Information including execution of a confidentiality agreement with the members of the Sub-Implementation Agency to the satisfaction of ANIIDCO.

7.17.4 The Parties have signed a Non Disclosure Agreement (NDA) with ANIIDCO. The Parties shall be bound by the NDA. The Implementation Agency will be held responsible for any breach of the NDA by its antecedents, delegates or Sub- Implementation Agency.

7.17.5 The Implementation Agency shall notify ANIIDCO promptly if it is aware of any disclosure of the ANIIDCO's Confidential Information otherwise than as permitted by this Contract or with the authority of ANIIDCO.

7.17.6 ANIIDCO reserves the right to adopt legal proceedings, civil or criminal, against the Implementation Agency in relation to a dispute arising out of breach of obligation by the Implementation Agency under this clause.

7.17.7 The Implementation Agency shall not take away or remove in whatever manner any information on any media like but not limited to Floppy, Digital Drives, CDs. DVDs, email etc from ANIIDCO without the specific written permission of ANIIDCO.

7.17.8 The Implementation Agency shall not use any of ANIIDCO's Confidential

Information which might have come to its knowledge in whatever manner during the discharge of its obligations under the Contract for any purpose except strictly for discharging its obligations under the Contract

7.18 Term and Extension of the Contract

7.18.1 The term of this Contract shall be for a period as indicated in the clause 7.5 of Contract and Contract shall come to an end on expiry of such period unless its term is extended by ANIIDCO and Implementation Agency on mutual consent

7.18.2 ANIIDCO shall reserve the sole right to grant any extension to the term mentioned above on mutual agreement including fresh negotiations on terms and conditions.

7.19 Prices

7.19.1 **Contract Prices**/ **Value**: Prices quoted must be firm and shall not be subject to any upward revision on any account whatsoever throughout the period of Contract for the Scope of Work covered under the Contract subject to Change Order provisions set out in clause 7.20. ANIIDCO also reserves the right to negotiate the price quoted in the bid to effect downward modification. Payment of tax/duties will be made on actual. However, the Operation and Maintenance (O&M) cost to be broken down in to manpower cost, comprehensive AMC for equipments on Land and Cable repair cost. Indexing for manpower cost based on CPI annually, AMC for equipment on Land shall be percentage of the capital cost and repair of wet part (Undersea Cable) shall be paid on actual as per the charges by cable maintenance agency South East Asia Indian Ocean Cable Maintenance Agreement (SEAIOCMA) on back to back basis plus 15% administrative charges on annual fixed charge to be paid to SEAIOCMA.

Quoted price must be exclusive of all taxes & duties, which shall be reimbursed at actual against document.

7.20 Change Orders Provisions

7.20.1 The Change Order will be applicable only in case of variation in quantity of Undersea Cable, 1 meter plough burial and terrestrial cable due to site conditions or change in cable route due to physical survey at the time of execution of the Project subject to actual measurement of Bill of Material (BOM) and also subject to verification by independent engineer appointed by the ANIIDCO.

7.20.2 In case of such Change Order requirement arising, the Implementation Agency should give a request in writing to ANIIDCO giving details of extra

quantity, revised estimated cost and revised design for approval.

7.20.3 The Change Order provision shall be mutually agreed within a time frame of 15 days from the date of receipt of the request.

7.20.4 The unit rate quoted by the Implementation Agency as part of its financial quote and accepted by ANIIDCO shall be the rate for placing change orders, if any. However, if the subject of the Change Order is not covered by a unit price or rate as indicated above, the Implementation Agency shall satisfy ANIIDCO that the proposed adjustment is fair and reasonable and shall provide such evidence as ANIIDCO may reasonably require to this end.

7.21 Security Requirements:

7.21.1(a) The Implementation Agency shall enable the ANIIDCO to comply with Applicable Laws including but not limited to notifications, circulars etc issued by DOT from time to time.

(b) The Implementation Agency recognizes and accepts that in order to make, maintain and ensure Purchaser's networks compliant with security related instructions and guidelines issued by the DOT from time to time, complete cooperation and commitment of the Implementation Agency is necessary. To help and address the business continuity, communication, security requirements and security management of network, the Implementation Agency shall execute an agreement in the form as specified in the clause 7.3.16 of this Contract before issuance of Letter of Award by the ANIIDCO.

The Implementation Agency shall indemnify and hold harmless the ANIIDCO and its employees, agents, shareholders, directors, representatives, against any claims or penalty or consequence arising out of breach of the security related terms of the license as a result of breach or non-compliance by the Implementation Agency with its obligations in this sub-Clause (b) or any separate agreement executed for this purpose.

It is clarified that any expenditure incurred by the ANIIDCO for complying with security related provisions as prescribed under Applicable Law shall be borne by the Implementation Agency. In the event there is a breach of the security related provisions as prescribed under Applicable Laws, any penalty imposed by the DoT on the ANIIDCO shall be paid by the Implementation Agency to the ANIIDCO. Further, any testing of Implementation Agency's equipment including requirement of testing equipment shall be met by Implementation Agency on his own cost.

7.21.2 Compliance with Licenses

The Implementation Agency shall assist and provide support as and when required to the ANIIDCO including the providing of information and documents to comply with the provisions of the Licenses, any amendments made thereto as well as any notifications, circulars, letters issued by DOT or any other Governmental Authority from time to time specially in relation to security clearance and lawful interception.

7.21.3 Security Clearance of foreign personnel:

All foreign personnel likely to be deployed by the Implementation Agency for any activity pertaining to this project shall obtain security clearance from the Government of India prior to their deployment. The security clearance will be obtained from Ministry of Home Affairs, Government of India.

7.21.4 Non – Compliance

The Implementation Agency including their personnel, employees, associates and sub-Implementation Agency shall be solely responsible for complying with the statutes, laws, regulations, subordinate legislation, administrative orders and instructions issued by relevant Government Authorities, regarding, but not limited to, environment, industrial relations, security and taxation, during the performance of their respective obligations under this Contract except the license/permits agreed to be obtained by ANIIDCO as per Annexure – 6. Without limiting the generality of the foregoing, the Implementation Agency shall be responsible for compliance with the applicable laws and similar regulations applicable to its activities hereunder, at its own cost and expenses. In the event there is a delay by the Implementation Agency which is solely attributable to Implementation Agency in fulfilling its obligations under this Contract or any non-compliance or breach of obligations under this Contract by the Implementation Agency due to which any Governmental Authority imposes sanctions on ANIIDCO, which results in financial and other liabilities on the ANIIDCO, the Implementation Agency shall be liable to make good such loss immediately which has been suffered by the ANIIDCO.

7.21.5 The Implementation Agency shall ensure that any installation carried out by them under the Project should not become a safety hazard and is not in contravention of any statute, rule, regulation, guidelines and public policy.

7.22 Completion of Contract

7.22.1 Unless terminated earlier, pursuant to Clauses 7.25, and 7.27 the Contract shall stand terminated on the completion of the term as specified in the Contract.

7.23 Payment Schedule

7.23.1 The fee amount will be equal to the amount specified in **Section X – Format for Response to Tender – Commercial Bid.** Payments will be released only on satisfactory acceptance of the deliverables for each Task as per the following schedule:

Sl. No.	Billing Milestone	Criteria for Milestone Achievement	BM No.	Amount	Payment	Remarks
1	2	3	4	5	6	7
1	Contract agreement	Coming into force	BM 0		20% of CAPEX (Mobilization Advance)	Against bank guarantee of 110%
2	Route survey	Submission of marine survey report, cable station and terrestrial route design	BM 1		100% amount of BM 1	Adjustment of mobilization advance shall be done progressively @ 30% from each bill cleared for payment
3	Undersea Cable and other submerged equipment	Factory release of cable spans corresponding to 50% of total cable length	BM 2a		10% of CAPEX (Mobilization Advance)	Against bank guarantee of 110%
		Against dispatch documents	BM 2b		Balance payment of Sl. No. 3	
4	Utilities(Power Plant, AC plant)	Upon delivery at Port Blair for Port Blair	BM 3a		90% of BM 3a	
		Upon delivery at Port Blair for other islands	BM 3b		90% of BM 3b	
5	Terminal station equipment including terrestrial cables and spares	Upon delivery at Port Blair for Port Blair	BM 4a		90% of BM 4a	
		Upon delivery at Port Blair for other islands	BM 4b		90% of BM 4b	
6	Marine Installation	Marine installation is completed for BU - Port Blair segment	BM 5a		90% payment of BM 5a	

		Marine installation is completed for all remaining segments (other than BU - Port Blair segment)	BM 5b		90% payment of BM 5b	
7	System Acceptance	Test period of system acceptance is completed for Port Blair segment	BM 6a		10% of BM 3a+4a+5a	
		Test period of system acceptance is completed for all remaining segments (other than BU - Port Blair segment)	BM 6b		10% of BM 3b+4b+5b	
8	Operation and Maintenance for 15 years	Payable quarterly at the end of each quarter	BM 7		Quarterly payment	Subject to SLA provisions

7.23.2 All payments shall be made in Indian Rupees Only and will be subject to provisions of Clauses 7.29 and 7.30.

7.23.3 The payment shall be released as per billing milestone at clause 7.23.1 of the contract. In case of variation in quantity due to change order provision, the payment for additional quantity shall be released subject to verification by independent engineer appointed by ANIIDCO.

7.23.4 ANIIDCO shall pay all undisputed amounts due within forty five (45) days of receiving an invoice from the Implementing Agency.

7.23.5 The amount of tax and duties shall be reimbursed at actual against document. Service tax if any will also be paid extra on Operation and Maintenance expenses.

7.23.6 Mandatory taxes/duties (TDS) to be recovered/ withheld will be deducted by ANIIDCO

7.23.7 The mobilization advance provided shall be interest free, however if the contract is terminated due to default by the Implementation Agency, the mobilization advance would be deemed as interest bearing advance at an interest rate of 12% per annum.

7.24 Events of Default by the Parties

7.24.1 Subject to provisions of (i) clause7.40.13 (Delays or omissions) of the Agreement and (ii) Force Majeure Events; in which case Implementation Agency shall not be in fault, the failure on the part of the Implementation Agency to perform any of its material obligations or comply with any of the material terms of this Contract shall constitute an event of default (‘Event(s) of Default’) on the part of the Implementation Agency. The Events of Default as mentioned above may include but not limited to the following:

7.24.1.1 The Implementation Agency has failed to adhere to timelines, specifications, requirements or such other criteria as defined under the Contract/Bid/SLA for the purposes of execution of the Scope of Work and agreed to by the Implementation Agency, which materially affect the Implementation Agency's performance of this Contract.

7.24.1.2 The Implementation Agency has failed to demonstrate or sustain any representation or warranty made by it in this Contract which materially affects the Implementation Agency's performance of the Contract

7.24.1.3 The Implementation Agency/Implementation Agency's Team has failed to comply with or is in breach or contravention of any applicable laws which materially affects the Implementation Agency's performance of the Contract.

7.24.1.4 The failure on the part of ANIIDCO to perform any of its obligations or comply with any of the terms of this Contract shall constitute an Event of Default on the part of the ANIIDCO. The Event of Default also includes ANIIDCO's (or its representative's): (i) non-fulfillment of its obligations under this Contract; (ii) violation or breach of applicable laws, regulations, rules or order;

7.24.1.5 Where there has been an occurrence of such Event(s) of Default inter alia as stated above, the non-defaulting party shall issue a notice of default ('Notice of Default') to the defaulting party, setting out specific defaults / deviations / omissions and providing a notice of Sixty (60) days ("Cure Period") to enable Implementation Agency to remedy the Event of Default committed within the Cure Period. The Cure Period would commence from the date of receipt of Notice of Default by the defaulting party.

7.24.1.6 Where despite the issuance of a Notice of Default and the defaulting party fails to remedy the Event of Default within the Cure Period, non- defaulting party may, where it deems fit, issue to defaulting party another default notice or proceed to adopt such remedies as may be available to parties.

7.25 Consequences in Event of Default

7.25.1 Where an Event of Default subsists or remains uncured beyond ninety (90) days (subject to an equitable extension being granted for delay caused by a Force Majeure event) from the date of receipt of the notice of the Event of Default by the defaulting Party from the non defaulting Party, the defaulting party shall be entitled to the following for cases where permissible time is not indicated in the Contract and the Parties shall mutually decide the quantum of reasonable time to cure the default :

7.25.1.1 Issue clarifications as is necessary to achieve the Scope of Work. Any re-

determination of the consideration payable to the Implementation Agency hereunder shall be mutually agreed to between the Parties. The Implementation Agency shall in addition take all available steps to minimize loss resulting from such event of default.

7.25.2 ANIIDCO may by a written notice of suspension to the Implementation Agency, suspend payments restricted to the Scope of Work affected by the Event of Default under the Contract provided that such notice of suspension:

7.25.2.1 Shall specify the nature of the failure and

7.25.2.2 Shall request the Implementation Agency to remedy such failure within a specified period from the date of receipt of such notice of suspension by the Implementation Agency.

7.25.3 ANIIDCO reserves the right to terminate the Contract with 30 days notice if after the provision of a 90 days notice for cure or remedy of the Event of Default solely attributable to the Implementation Agency and the end of such time period, the Implementation Agency has not remedied or cured such Event of Default.

7.25.4 In the Event of Default by ANIIDCO, the Implementation Agency may choose to either suspend or terminate the Contract with no liability or costs accruing on the Implementation Agency. The Implementation Agency will provide ANIIDCO with a 90 days notice period to cure or remedy such Event of Default as specified in the aforementioned notice. If at the end of the notice period, ANIIDCO has not cured or remedied such Event of Default to the satisfaction of the Implementation Agency, the Implementation Agency may, at is option, choose to suspend or terminate the Contract with no liability or costs accruing or fastening on it for such suspension or termination. "In such a case ANIIDCO would still have to pay for the Services rendered by the Implementation Agency up to the day of termination of the Contract.

For the avoidance of doubt, termination payment shall include the prices for completed equipment material and supplies delivered and services performed till the date of termination and the amounts agreed upon by ANIIDCO based on documentary evidence for the cost incurred for the services rendered. In case, termination payable is not found acceptable to ANIIDCO, it shall be referred to arbitration under clause 7.31

7.26 Intentionally left blank

7.27 Termination

7.27.1 ANIIDCO may terminate this Contract in whole or in part by giving the Implementation Agency prior written notice indicating its intention to terminate the

Contract under the following circumstances:

7.27.1.1 Where the Implementation Agency's ability to survive as an independent corporate entity is threatened or is lost owing to any reason whatsoever including inter alia the filing of any bankruptcy proceedings against the Implementation Agency, any failure by the Implementation Agency to pay any of its dues to its creditors, the institution of any winding up proceedings against the Implementation Agency and any order is passed for winding up of the Implementation Agency or the happening of any such events that are adverse to the commercial viability of the Implementation Agency in the opinion of ANIIDCO. In the event of the happening of any events of the above nature, ANIIDCO shall reserve the right to take any steps as are necessary to ensure the effective transition of the Project to a successor Implementation Agency/service provider, and to ensure business continuity.

7.27.1.2**Termination for Insolvency**: ANIIDCO may at any time terminate the Contract by giving written notice to the Implementation Agency without compensation to the Implementation Agency, if the Implementation Agency becomes bankrupt or otherwise insolvent, provided that such termination will not prejudice or affect any right of action or remedy which has accrued or will accrue thereafter to ANIIDCO.

7.27.1.3 **Termination for Default:** ANIIDCO may at any time terminate the Contract by giving 30 days prior written notice to the Implementation Agency without compensation to the Implementation Agency on the occurrence of any of the Events of Default on the part of the Implementation Agency as covered in clause 7.24 (Event of Default). The Implementation Agency agrees that, even on termination of contract due to default by Implementation Agency, ANIIDCO shall have the right to use the fibre pair from Chennai to Singapore via A & N Islands for a period of 15 years from the date of commissioning without payment of any additional amount.

7.28 **Consequences of Termination**

7.28.1 In the event of termination of this contract due to any Events of Default the Implementation Agency shall be blacklisted and the empanelment will stand cancelled effective from the date of termination of this Contract and ANIIDCO may retain such amounts from the payment due and payable by ANIIDCO to the Implementation Agency as may be required to offset any losses caused to ANIIDCO as a result of such event of default and the Implementation Agency shall compensate ANIIDCO for any such loss, damages or other costs, incurred by

ANIIDCO in this regard. Nothing herein shall affect the continued obligation of the Sub Implementation Agency / other members of its Team to perform all their obligations and responsibilities under this Contract in an identical manner as were being performed before the occurrence of the default

7.28.2. In the event of termination of this Contract due to any cause whatsoever, whether consequent to the stipulated Term of the Contract or otherwise, ANIIDCO shall be entitled to impose any such obligations and conditions and issue any clarifications as may be necessary to ensure an efficient transition and effective business continuity of the Project which the Implementation Agency shall be obliged to comply with and take all available steps to minimize loss resulting from that termination/breach and further allow and provide all such assistance to ANIIDCO and/or the successor **of** Implementation Agency/ service provider, as may be required to take over the obligations of the erstwhile Implementation Agency in relation to the execution/continued execution of the scope of this Contract.

7.28.3 Where the termination of the Contract is prior to its stipulated term on account of a Default on the part of the Implementation Agency or due to the fact that the survival of the independent corporate entity is threatened/has ceased or for any other reason whatsoever ANIIDCO through mutual re-determination of the consideration payable to the Implementation Agency shall pay the Implementation Agency for that part of the Services which have been authorized by ANIIDCO and satisfactorily performed by the Implementation Agency up to the date of termination. Without prejudice to any other rights ANIIDCO may retain such amounts from the payment due and payable by ANIIDCO to the Implementation Agency as may be required to offset any losses caused to ANIIDCO as a result of any act/omissions of the Implementation Agency. In case of any loss or damage due to default on the part of the Implementation Agency in performing any of its obligations with regard to executing the Scope of Work under this Contract, the Implementation Agency shall compensate ANIIDCO for any such loss, damages or other costs incurred by ANIIDCO. Additionally the Sub Implementation Agency/ other members of its team shall perform all its obligations and responsibilities under this Contract in an identical manner as were being performed before the collapse of the Implementation Agency as described above in order to execute an effective transition and to maintain business continuity. All third parties shall continue to perform all/any functions as stipulated by ANIIDCO and as may be proper and necessary to execute the Scope of Work under the Contract.

7.28.4 Nothing herein shall restrict the right of ANIIDCO to invoke the Bank Guarantee furnished hereunder and enforce such other rights and/or pursue remedies that may be available to ANIIDCO under the law and this Contract.

7.28.5 The termination hereof shall not affect any accrued right or liability of either Party nor affect the operation of the provisions of this Contract that are expressly or by implication intended to come into or continue in force on or after such termination.

7.28.6 If this Contract is terminated in accordance with clause 7.27 above, the Implementation Agency shall transfer title of unfinished Undersea Cable System and to deliver to ANIIDCO in the manner and to the extent directed by ANIIDCO, any completed equipment, material or supplies, and such partially completed cable and materials, parts, tools, dies, jigs, fixtures, plans, drawings, information, and contract rights as the Implementation Agency has had specifically produced or specifically acquired for the performance of such part of this Contract as may have been terminated and which if this Contract had been completed, would have been required to have been furnished to ANIIDCO. In addition, the Implementation Agency shall protect and preserve property in its possession in which ANIIDCO has an interest. The Implementation Agency shall be paid the prices for completed equipment, material and supplies delivered and services performed, and the amounts agreed upon by ANIIDCO and Implementation Agency for the manufacturing materials delivered to ANIIDCO by the Implementation Agency, and for the protection and preservation of property in which ANIIDCO has an interest.

7.28.7 Notwithstanding the termination of the contract due to any reasons whatsoever, ANIIDCO shall have the right to use the fibre pair from Chennai to Singapore via A & N Islands for a period of 15 (fifteen) years from the date of commissioning without payment of any additional amount.

7.29 Penalty and Liquidated Damages

7.29.1 if the Implementation Agency fails to complete the Commissioning of Undersea Cable System before the scheduled completion date or the extended date, liquidated damages shall be recovered as under:

Phase	Target	Penalty
Phase –I (Port Blair) Laying of Undersea cable and setting up of landing station/NOC	65 Week from the Effective Date	A penalty of 0.04% per week for the first four weeks, thereafter 0.1% per week for next four weeks and subsequently 2.5% per week subject to a maximum of 10% of CAPEX value of contract.
Phase –II (Other than Port Blair)	85 Week from the Effective Date	A penalty of 0.04% per week for the first four weeks, thereafter

Laying of Undersea cable and setting up of landing station/NOC		0.1% per week for next four weeks and subsequently 2.5% per week subject to a maximum of 10% of CAPEX value of contract.

However if the commencement of the work shall, without default or negligence of the Implementation Agency, be delayed on account of Force Majeure or due to default on the part of ANIIDCO, the Implementation Agency shall be granted such extension of time for completion as may be mutually agreed between ANIIDCO and the Implementation Agency, and such delay shall not be subject to this clause.

7.29.2 During Operation and Maintenance period performance and service levels shall be as per the parameters stipulated by ANIIDCO in this contract, failing which ANIIDCO shall impose penalties on the Implementation Agency as defined in Section V - Service Level Agreement of the RFP document.

7.29.3 Subject to the provisions contained in clause ____ (Force Majeure) and clause ____ for Delays or Omissions (Clause 7.40.13), if the Implementation Agency fails to complete the Commissioning of Undersea Cable System before the scheduled completion date or the extended date or if Implementation Agency repudiates the Contract before completion of the Work or fails to provide service availability during operation and maintenance, ANIIDCO at its discretion may without prejudice to any other right or remedy available to ANIIDCO under the Contract recover penalty as per provisions of Service Level Agreement. ANIIDCO may without prejudice to its right to effect recovery by any other method deduct the amount of liquidated damages from any money belonging to the Implementation Agency in its hands (which includes ANIIDCO's right to claim such amount against Implementation Agency's Bank Guarantee) or which may become due to the Implementation Agency. Any such recovery or liquidated damages shall not in any way relieve the Implementation Agency from any of its obligations to complete the Works or from any other obligations and liabilities under the Contract.

7.30 Left Intentionally blank

7.31 Dispute Resolution

7.31.1 ANIIDCO and the Implementation Agency shall make every effort to resolve amicably between the execution of ANIIDCO and Implementation Agency by direct informal negotiations any disagreement or disputes arising between them under or in connection with the Contract.

7.31.2 If, after Thirty (30) days from the commencement of such direct informal

negotiations, ANIIDCO and the Implementation Agency have been unable to resolve amicably a contract dispute, either party may require that the dispute be referred for resolution to the formal mechanism specified in Clauses 7.31.3 and 7.31.4.

7.31.3 In the case of a dispute or difference arising between ANIIDCO Ltd. and Implementation Agency relating to any matter arising out of or connected with this contract, such dispute or difference shall be referred to three arbitrators constituting the Board of Arbitrator, one to be appointed by each party and the third to be appointed by the two appointed arbitrators. The decision of the Board of Arbitrators shall be final and binding upon ANIIDCO and Implementation Agency.

7.31.4 The Arbitration and Conciliation Act 1996, the rules there under and any statutory modification or re-enactments thereof, shall apply to the arbitration proceedings.

7.31.5 The venue of arbitration shall be at Port Blair, India.

7.31.6 ANIIDCO may terminate this contract by giving a written notice of termination of minimum 30 days to the Implementation Agency, if the Implementation Agency fails to comply with any decision reached consequent upon arbitration proceedings pursuant to Clause 7.31.3.

7.31.7 Continuance of the Contract:

7.31.7.1 Notwithstanding the fact that settlement of dispute(s) (if any) under arbitration may be pending, the parties hereto shall continue to be governed by and perform the work in accordance with the provisions under the Scope of Work to ensure continuity of operations unless the dispute relates to termination

7.31.8 A Party may, without waiving any remedy under this Contract, apply to the arbitrator and/or Court having jurisdiction any interim, provisional, temporary, or conservatory relief that is necessary to protect the rights or property of that Party until the arbitration award is rendered or the dispute is otherwise resolved. Any decision by the arbitrator will be final and binding on the Parties, and the judgment thereon may be entered by any Court of competent jurisdiction.

7.32 Limitation of the Implementation Agency's Liability towards ANIIDCO

7.32.1 Neither Party shall be liable for any indirect, consequential, special, exemplary, punitive damages, loss of business, loss of profit under the Contract. However, this limitation of liability shall not affect the liability, if any, of the Implementation Agency for damage/loss as a result of third party claims in connection with (a) wilful

misconduct of the defaulting party or (b) death or personal injury and as a result of wilful misconduct, gross negligent, fraud etc.

7.33 Conflict of Interest

The Implementation Agency shall disclose to ANIIDCO in writing, all actual and potential conflicts of interest that exist, arise or may arise (either for the Implementation Agency or the Implementation Agency's Team) in the course of performing the Services as soon as practically possible after it becomes aware of that conflict.

7.34 Severance

In the event any provision of this Contract is held to be invalid or unenforceable under the applicable law, the remaining provisions of this Contract shall remain in full force and effect.

7.35 Governing Language

The Agreement shall be written in English language. All correspondence and other documents pertaining to the Contract that are exchanged by parties shall be written in English language only.

7.36 "No Claim" Certificate

The Implementation Agency shall not be entitled to make any claim, whatsoever against ANIIDCO under or by virtue of or arising out of this Contract, nor shall ANIIDCO entertain or consider any such claim, if made by the Implementation Agency after it shall have signed a "No claim" certificate in favour of ANIIDCO in such forms as shall be required by ANIIDCO after the works are finally accepted.

7.37 Publicity

The Implementation Agency shall not make or permit to be made a public announcement or media release about any aspect of this Contract unless ANIIDCO first gives the Implementation Agency its written consent.

7.38 Force Majeure

7.38.1 Force Majeure shall mean:

- Act of God
- Act of War
- Act of public enemies

- Acts of terrorists.
- Fire, unless caused by the actual fault or privity of a Cable ship Operator or Depot Operator or Implementation Agency or all of them.
- Perils, dangers and accidents of the sea or other navigable waters.
- Arrest or restraint of princes, rulers or people, or seizure under legal process.
- Quarantine restrictions.
- Strikes or lockouts or stoppage or restraint of labour from whatever cause, whether partial or general.
- Riots and civil commotions.
- Rescue attempts for life or property at sea or to take abroad or land refugees.
- Pirates or assailing thieves.
- Adverse weather conditions subject to the capability of the ship and certification of adverse weather by the Port Authority.
- Trawler or third party anchor damage leading to cable cut on both end of the Branching Unit.
- Cable cut on the main trunk of undersea cable towards mainland India before BU 1 in case DOT clearance for protection path using international gateway is not obtained by ANIIDCO.
- Changes in regulations if such changes can influence a Party's ability to perform its obligations under this Contract.
- Strike, sabotage, lockout, embargo, economic sanctions, import restriction, port congestion, lack of usual means of public transportation and communication, industrial dispute, shipwreck, shortage or restriction of power supply or materials, epidemics, quarantine, and plague; Earthquake, landslide, volcanic activity, fire, flood or inundation, tidal wave, typhoon or cyclone, hurricane, storm, lightning, or other inclement weather condition, nuclear and pressure waves, or other natural or physical disaster

Neither Party shall be under any liability for failure to perform any of its obligations hereunder where such failure to perform arises from a Force Majeure event.

Notwithstanding anything mentioned hereinabove, ANIIDCO reserves the right to terminate the Contract, if the Force Majeure conditions persist beyond sixty (60) days after issuing fifteen (15) days notice to the Implementation Agency.

7.38.2 Force Majeure shall not include any event caused due to acts/omissions of such Party or result from a breach/contravention of any of the terms of the Contract. It shall also not include any default on the part of a Party due to its

negligence or failure to implement the stipulated/proposed precautions, as were required to be taken under the Contract.

7.38.3 ANIIDCO will make the payments due for Services rendered till the occurrence of Force Majeure provided the Implementation Agency with all possible documents prove the extent of work done by the Agency. However, any failure or lapse on the part of the Implementation Agency in performing any of its obligations as is necessary and proper to negate the damage due to projected force majeure events or to mitigate the damage that may be caused due to the abovementioned events or the failure to provide adequate disaster management/ recovery or any failure in setting up a contingency mechanism would not constitute force majeure, as set out above.

7.38.4 In case of a Force Majeure all Parties will endeavour to agree on an alternate mode of performance in order to ensure the continuity of service and implementation of the obligations of Parties under this Contract and to minimize any adverse consequences of Force Majeure.

7.39 Exit Management

7.39.1.1 This Schedule sets out the provisions, which will apply on expiry or termination of the Contract.

7.39.1.2 The Parties shall ensure that their respective associated entities carry out their respective obligations set out in this Exit Management Schedule.

7.39.1.3 The Implementation Agency shall be entitled to use the assets for the duration of the exit management period, which shall be the four month period from the date of expiry of contract.

7.39.2 Intentionally left Blank

7.39.3 Cooperation and Provision of Information

During the exit management period the Implementation Agency will allow ANIIDCO to access to information reasonably required defining the current mode of operation associated with the provision of the services to enable ANIIDCO to assess the existing services being delivered.

7.39.4 Confidential Information, Security and Data

The Implementation Agency will promptly on the commencement of the exit management period, supply to the ANIIDCO or its nominated agencies the following:

7.39.4.1 Information relating to the current services rendered and performance data relating to the performance of the services; Documentation relating to ANIIDCO's Project's Intellectual Property Rights; any other data and Confidential

Information related to ANIIDCO; All current and updated ANIIDCO Project data as is reasonably required for purposes of the ANIIDCO Project or for transitioning of the services to its Replacement Implementation Agency in a readily available format.

7.39.4.2 All other information (including but not limited to documents, records and agreements) relating to the Services reasonably necessary to enable ANIIDCO and its nominated agencies, or its replacement implementation agency to carry out due diligence in order to transition the provision of the Services to ANIIDCO or its nominated agencies, or its replacement implementation agency (as the case may be).

7.39.5 Employees

7.39.5.1 Promptly on reasonable request at any time during the exit management period, the Implementation Agency shall, subject to applicable laws, restraints and regulations (including in particular those relating to privacy) provide to ANIIDCO a list of all employees (with job titles and communication address) of the Implementation Agency, dedicated to providing the services at the commencement of the exit management period.

7.39.6 Rights of Access to Information

At any time during the exit management period, the successful bidder will be obliged to provide an access of information to ANIIDCO, and/or any replacement the implementation agency in order to make an inventory of the Assets (including hardware/Software/Active/passive), layouts, diagrams, schematics, documentations, manuals, catalogs, archive data, IP addressing, Live data, policy documents or any other material related to Undersea cable Project.

7.39.7 Exit Management Plan

7.39.7.1 The Successful Bidder shall provide ANIIDCO with a recommended exit management plan ("Exit Management Plan") which shall deal with at least the following aspects of exit management in relation to the SLA as a whole and in relation to the Project Implementation, the Operation and Management SLA and Scope of Work definition.

(a) A detailed program of the transfer process that could be used in conjunction with a Replacement Successful Bidder including details of the means to be used to ensure continuing provision of the Services throughout the transfer process or until the cessation of the Services and of the management

structure to be used during the transfer;

(b) Plans for the communication with such of the Implementation Agency, staff, suppliers, customers and any related third party as are necessary to avoid any material detrimental impact on the Project's operations as a result of undertaking the transfer;

(c) Plans for provision of contingent support to Undersea cable Project and Replacement Successful Bidder for a reasonable period after transfer.

7.39.7.2 The Successful Bidder shall re-draft the Exit Management Plan annually thereafter to ensure that it is kept relevant and up to date.

7.39.7.3 Each Exit Management Plan shall be presented by the Successful Bidder to and approved by ANIIDCO or its nominated agencies.

7.39.7.4 The terms of payment as stated in the Terms of Payment Schedule include the costs of the Successful Bidder complying with its obligations under this Schedule.

7.39.7.5 In the event of termination or expiry of SLA, Project Implementation, Operation and Management SLA or Scope of Work each Party shall comply with the Exit Management Plan.

7.39.7.6 During the exit management period, the Successful Bidder shall use its best efforts to deliver the services.

7.39.7.7 Payments during the Exit Management period shall be made in accordance with the Terms of Payment Schedule.

7.39.7.8 This Exit Management plan shall be furnished in writing to ANIIDCO or its nominated agencies within 15 days from the Effective Date of this Agreement.

7.40 General

7.40.1 Relationship between the Parties

7.40.1.1Nothing in this Contract constitutes any fiduciary relationship between ANIIDCO and Implementation Agency/ Implementation Agency's Team or any relationship of employer employee, principal and agent, or partnership, between ANIIDCO and Implementation Agency.

7.40.1.2 No Party has any authority to bind the other Party in any manner whatsoever except as agreed under the terms of this Contract.

7.40.1.3 ANIIDCO has no obligations to the Implementation Agency's Team except as agreed under the terms of this Contract.

7.40.2 No Assignment

The Implementation Agency shall not be entitled to transfer any interest, right, benefit or obligation under this Contract without the prior written consent of ANIIDCO.

7.40.3 Survival

The provisions of the clauses of this Contract in relation to documents, data, processes, property, Intellectual Property Rights, indemnity, publicity and confidentiality and ownership survive the expiry or termination of this Contract and in relation to confidentiality, the obligations continue to apply unless ANIIDCO notifies the Implementation Agency of its release from those obligations.

7.40.4 Entire Contract

The terms and conditions laid down in the Tender and all annexure thereto as also the Bid, and any attachments/annexures thereto shall be read and construed in conjunction with this Contract and form an integral part of this Contract. This Contract supersedes any prior Contract, understanding or representation of the Parties on the subject matter and shall be the sole reference and controlling document for all issues relating to the Project.

7.40.5 Governing Law

This Contract shall be governed in accordance with the laws of India.

7.40.6 Jurisdiction of Courts

The courts at Port Blair will have exclusive jurisdiction to determine any proceeding in relation to this Contract.

7.40.7 Compliance with Laws

The Implementation Agency shall comply with the laws in force in India in the course of performing this Contract.

7.40.8 Notices

A “notice” means:

a. a notice;
b. consent, approval or other communication required to be in writing under this Contract.

All notices, requests or consents provided for or permitted to be given under this Contract shall be in writing and shall be deemed effectively given when personally delivered or mailed by pre-paid certified/registered mail, return receipt requested, addressed as follows and shall be deemed received 7 days after mailing or on the date of delivery if personally delivered whichever is earlier:

To

The General Manager,
ANIIDCO Ltd.
Port Blair – 744103

To Implementation Agency at:

Attn:

[Phone:]
[Fax:]

Any Party may change the address to which notices are to be directed to it by notice to the other parties in the manner specified above.

A notice served on a Representative is taken to be notice to that Representative's Party.

7.40.9 Waiver

7.40.9.1 Any waiver of any provision of this Contract is ineffective unless it is in writing and signed by the Party waiving its rights.

7.40.9.2 A waiver by either Party in respect of a breach of a provision of this Contract by the other Party is not a waiver in respect of any other breach of that or any other provision.

7.40.9.3 The failure of either Party to enforce at any time any of the provisions of this Contract shall not be interpreted as a waiver of such provision.

7.40.10 Modification

Any modification of this Contract shall be in writing and signed by an authorized representative of each Party.

7.40.11 Intentionally left blank

7.40.12 Rights of Third Parties

Except as expressly stated herein, nothing in this Agreement shall confer any right upon any person other than the Parties hereto and their respective successors and permitted assigns.

7.40.13 Delays or omissions

Neither party shall be liable for any delay or failure in the performance of its obligations under this Contract, if and to the extent such failure is caused by the actions or omissions of the other Party or other Party's agents or due to a

breach of this Contract by the other Party.

The following documents shall be deemed to form and be read and construed as part of this Contract viz:

(a) The Annexure "A": Service Level Agreement of Contract
(b) The Annexure "B": Scope of Work
(c) The Annexure "C": IA's Technical Proposal
(d) The Annexure "D": Bill of Material (Goods and Services to be supplied by the Implementation Agency under this Contract)
(e) Other Annexure mentioned in the Contract

IN WITNESS whereof the parties hereto have caused this Agreement to be executed in accordance with laws of India the day and year first above written.

Signed, Sealed and Delivered
For and on behalf of: ANIIDCO, A&N Islands
in terms of the Resolutions passed by the Board of Directors of _____ in the presence of:

Signed, Sealed and Delivered for and on behalf of _____ by its duly authorized person Shri _____ in terms of the Resolutions passed by the Board of Directors of _____ in the presence of:

SECTION – VIII

Formats to Response to the Tender – Pre-Qualification Bid

The Bidders are required to submit a Technical and Financial bid in response to this tender. This section provides the outline, content and the formats that the Bidders are required to follow in the preparation of their Technical and Commercial Bids.

8.1 Format 1 – Pre-Qualification Bid Letter

To,

The General Manager
ANIIDCO,
Vikas Bhawan,
Port Blair – 744101

Sir/ Madam,

Subject: **Appointment of an Agency for Turnkey Project for Undersea cable project in A&N Islands connecting with mainland India.**

Reference: Tender No: **<TENDER REFERENCE NUMBER>** Dated **<DD/MM/YYYY>**

We, the undersigned Bidders, having read and examined in detail all the Tender documents do hereby propose to provide the services as specified in the Tender document number **<TENDER REFERENCE NUMBER> Dated <DD/MM/YYYY>** along with the following:

a. EARNEST MONEY DEPOSIT (EMD)

We have enclosed an EMD in the form of a Demand Draft for the sum of Rs. 9,00, 000, 00/- (Rupees Nine Crore only). This EMD is liable to be forfeited in accordance with the provisions of the *Section VII - General Conditions of the Contract.*

b. CONTRACT PERFORMANCE GUARANTEE BOND

We hereby declare that in case the contract is awarded to us, we shall submit the contract performance guarantee bond in the form prescribed in Annexure 5 - Proforma and as per Section VII - General Conditions of Contract.

We hereby declare that our bid is made in good faith, without collusion or fraud and the information contained in the bid is true and correct to the best of our knowledge and belief.

We understand that our bid is binding on us and that you are not bound to accept a bid you receive.

Thanking you,

Yours faithfully,

(Signature of the Bidder)
Printed Name
Designation
Seal
Date:
Business Address:

8.2 Format 2 - General Information about the Bidder

Details of the Prime Bidder (Company)				
1.	Name of the Bidder (Prime)			
2.	Address of the Bidder			
3.	Status of the Company (Public Ltd/ Pvt. Ltd)			
4.	Details of Incorporation of the Company		Date:	
			Ref.	
5.	Details of Commencement of Business		Date:	
			Ref.	
6.	Valid Sales tax registration no.			
7.	Valid Service tax registration no.			
8.	Permanent Account Number (PAN)			
9.	Name & Designation of the contact person to whom all references shall be made regarding this tender			
10.	Telephone No. (with STD Code)			
11.	E-Mail of the contact person:			
12.	Fax No. (with STD Code)			
13.	Website			
14.	Financial Details (as per audited Balance Sheets) (in Cr)			
15.	Year	2008-2009	2009-2010	2010-2011
16.	Net Worth			
17.	Turnover			
18.	PAT			
Details of the members of the Consortium (Please attach consortium Agreement)				
19.	Name of the Bidder (member of consortium)			
20.	Address of the Bidder			
21.	Status of the Company (Public Ltd/ Pvt. Ltd)			
22.	Details of Incorporation of the Company		Date:	
			Ref.	

23.	Details of Commencement of Business		Date:	
			Ref.	
24.	Valid Sales tax registration no.			
25.	Valid Service tax registration no.			
26.	Permanent Account Number (PAN)			
27.	Name & Designation of the contact person			
28.	Telephone No. (with STD Code)			
29.	E-Mail of the contact person:			
30.	Fax No. (with STD Code)			
31.	Website			
32.	Financial Details (as per audited Balance Sheets) (in Cr)			
33.	Year	2008-2009	2009-2010	2010-2011
34.	Net Worth			
35.	Turnover			
36.	PAT			

8.3 Format 3 – Pre qualification Check List

S. No.	Criteria	Documents required
1.	Telecom service provider having existing undersea cables from mainland India towards South East Asia OR Telecom service providers who agree to lay undersea cable from mainland India to A & N Islands or towards South East Asia in next one year from the date of RFP and owning undersea cable measuring atleast 1000 kms anywhere in the world. Bidder can be individual company or consortium. Consortium" shall mean more than one company which joins with other companies of complementing skills to undertake the scope of work defined in this RFP. In case of consortium the same shall not consist of more than three companies/ corporations, including the prime bidder.	(i) Documentary proof regarding ownership of undersea cable or copy of the Board resolution certified by Managing Director or Company Secretary regarding decision of laying undersea cable and documentary proof of ownership of cable. (ii) In case of consortium documents as mentioned in Annexure - 1 to be submitted.
2.	The bidder/prime bidder should be a company registered under the Companies Act, 1956 since last 3 years	Certificate of incorporation
3.	The Bidder (individually or as consortium) should have positive net worth of at least ₹ 500 crores as on 31.03.2011 and an average turnover of more than ₹ 300 crores as on year ending 31.03.2011 for last three Financial Years i.e. 2008-09, 2009-10 & 2010-11.	1. Chartered Accountant /CPA certificate for Net-worth. Net-worth shall exclude any revaluation reserve. 2. Copy of the audited annual accounts of the company for last three years.
4.	(i) The Bidder should furnish, as part of its bid, an Earnest Money Deposit (EMD) of ₹ 9,00,00,000 (ii) Cost of tender document of ₹ 25,000	(i) The EMD should be denominated in Indian Rupees, and should be in the form of DD / Bank Guarantee in favor of ANIIDCO payable at Port Blair from any nationalized bank. (ii) Receipt/DD towards cost of tender document.

5.	The Bidder and all consortium partners shall not be under a Declaration of Ineligibility for corrupt or fraudulent practices or blacklisted with any of the Government agencies.	Declaration in this regard by the authorized signatory of the prime bidder/bidder as per format at 8.4
6.	The Bidder should have tie up with the shipping agency for arranging the ships for cable laying	Letter/MOU from cable laying shipping agency confirming the tie up with them, for laying of cable & submerged equipment.
7.	The balance life of the undersea cable system offered for insertion of branching unit should be at least 15 years from the date of signing of contract.	Confirmation letter from cable owner
8.	Power of Attorney executed by the Bidder in favour of the Principal Officer or the duly Authorized Representative, certifying him as an authorized signatory for the purpose of this Tender.	Power of Attorney

8.4 Format 4 - Declaration Regarding Clean Track Record

To,

The General Manager
ANIIDCO,
Vikas Bhawan,
Port Blair – 744101.

Sir,

I have carefully gone through the Terms & Conditions contained in the RFP Document [No._____] regarding Turnkey Project for Undersea cable project in A&N Islands connecting with mainland India and Maintenance & Operations of the submarine cable system and Landing station for a period of fifteen years. I hereby declare that my company has not been debarred/black listed by any Government / Semi Government organizations in India. I further certify that I am competent officer in my company to make this declaration.

Yours faithfully,

Signature of the Bidder)
Printed Name
Designation
Seal
Date:
Business Address:

8.5 Format 5 – Declaration of Acceptance of Terms and Conditions in RFP

To,

The General Manager
ANIIDCO,
Vikas Bhawan,
Port Blair – 744101.

Sir,

I have carefully gone through the Terms & Conditions contained in the RFP document [No. ……..] regarding Turnkey Project for Undersea cable project in A&N Islands connecting with mainland India.

I declare that all the provisions of this RFP/Tender Document are acceptable to my company. I further certify that I am an authorized signatory of my company and am, therefore, competent to make this declaration.

Yours faithfully,

(Signature of the Bidder)
Printed Name
Designation
Seal
Date:

SECTION – IX

Formats to Response to the Tender – Technical Bid

9.1 Format 1 – Technical Bid Letter

To

The General Manager
ANIIDCO,
Vikas Bhawan,
Port Blair – 744101.

Sir/ Madam,

Subject: **Appointment of an Agency for "Turnkey project for undersea cable project in A & N Islands connecting mainland India"**

Reference: Tender No: **<TENDER REF. NO. >** Dated **<DD/MM/YYYY>**

We, the undersigned Bidders, having read and examined in detail all the Tender documents do hereby propose to provide the services as specified in the Tender document number **<TENDER REF. NO.> Dated <DD/MM/YYYY>** along with the following:

1. EARNEST MONEY DEPOSIT (EMD)

We have enclosed an EMD in the form of a Demand Draft for the sum of Rs. 9,00,00,000/- (Rupees Nine Crores only). This EMD is liable to be forfeited in accordance with the provisions of the *Section VII - General Conditions of the Contract.*

2. DEVIATIONS

We declare that all the services shall be performed strictly in accordance with the tender documents.

3. CONTRACT PERFORMANCE GUARANTEE BOND

We hereby declare that in case the contract is awarded to us, we shall submit the contract performance guarantee bond in the form prescribed in, Annexure 5 - Proforma and as per Section VII - General Conditions of Contract.

4. BID VAILIDITY PERIOD

We agree to abide by this bid for a period of 180 days after the date fixed for bid opening or for any further period for which bid validity has been extended and it shall remain binding upon us and Bid may be accepted at any time before the expiration of that period.

We hereby declare that our bid is made in good faith, without collusion or fraud and the information contained in the bid is true and correct to the best of our knowledge and belief.

We understand that our bid is binding on us and that you are not bound to accept a bid you receive.

Thanking you,
Yours faithfully,

(Signature of the Bidder)
Printed Name
Designation
Seal
Date:
Business Address:

9.2 Format - 2: Design basis for technical solution

The Bidder is required to describe the design basis and architecture offered for proposed undersea cable system and landing stations including diagrams.

9.3 Format 3: List of layout plans for undersea cable system

1. Over all site Layout plan
2. Beach manhole and platforms construction drawing
3. Back hauling cable trench details
4. Landing station inside layout plan.
5. Electrical Single line diagram
6. AC & DC cable tray layout
7. Data cable & Optical Fiber patch cords layout
8. Fire detection & suppression layout plan, BMS, CCTV, Access card system connections diagram

9.4 Format: 4: Specification, make, bill of material

S. No.	Details of the equipment	Make	Specification	Unit	Quantity

Note: Bidder to enclose the catalogue of the equipments and also specify the date of the launch of the equipment

9.5 Format 5: Project implementation schedule

The bidder is required to submit PERT chart showing plans to complete the project timelines, resource allocation, milestones etc.

9.6 Format 6: Operations & Maintenance plan for undersea cable system

The Operation and Maintenance of undersea cable system and Landing station cover the following subjects:

1. Management of undersea cable system including spares
2. Help desk management
3. MIS reports
4. Visitor management
5. Bandwidth management
6. SLA management
7. Proposed manpower for O&M of undersea cable system
8. Fault management procedure

9.7 Format 7: Timeframe for obtaining permits

Sl. No.	Permit	Timeframe	Remarks

9.8 Format 8: Acceptance Procedure/Test Plan

The bidder to submit the quality acceptance criteria & test plan for testing of each equipment and ANIIDCO shall review and approve the detailed final acceptance test plan (FAT) supplied by the bidder along with the FAT procedure.

SECTION – X

Formats to Response to the Tender – Financial Bid

10.1 Format 1 – Financial bid Letter

To,

The General Manager
ANIIDCO,
Vikas Bhawan,
Port Blair – 744101

Subject: Appointment of an Agency for turnkey project for undersea cable connecting A&N Islands with mainland India.

Reference: Tender No: **<TENDER REF. NO.>** Dated **<DD/MM/YYYY>**

We, the undersigned Bidder, having read and examined in detail all the Tender documents in respect of **Appointment of an Agency for turnkey project for undersea cable connecting A&N Islands with mainland India** do hereby propose to provide services as specified in the Tender documents number **<TENDER REF. NO. > Dated <DD/MM/YYYY>**

1. PRICE AND VALIDITY

- All the prices mentioned in our Tender are in accordance with the terms as specified in the Tender documents. All the prices and other terms and conditions of this Tender are valid for a period of 180 calendar days from the date of opening of the Tenders.
- We hereby confirm that our Tender prices include all taxes. However, all the taxes are quoted separately under relevant sections.
- We have studied the clause relating to Indian Income Tax and hereby declare that if any income tax, surcharge on Income Tax, Professional and any other corporate Tax in altercated under the law, we shall pay the same.

2. UNIT RATES

We have indicated in the relevant schedules enclosed the unit rates for the purpose of on account of payment as well as for price adjustment in case of any increase to / decrease from the scope of work under the contract.

3. DEVIATIONS

We declare that all the services shall be performed strictly in accordance with the tender documents.

4. TENDER PRICING

We further confirm that the prices stated in our bid are in accordance with your instruction to bidders included in tender documents.

5. QUALIFYING DATA

We confirm having submitted the information as required by you in your Instruction to Bidders. In case you require any other further information/documentary proof in this regard before evaluation of our Tender, we agree to furnish the same in time to your satisfaction.

6. BID PRICE

We declare that our Bid Price is for the entire scope of the work as specified in the Schedule of Requirements and Tender documents. These prices are indicated in Format 2 of this Section attached with our Tender as part of the Tender.

7. CONTRACT PERFORMANCE GUARANTEE BOND

We hereby declare that in case the contract is awarded to us, we shall submit the contract performance guarantee bond in the form prescribed in, Annexure 5- Proforma and as per Section VII - General Conditions of Contract.

We hereby declare that our Tender is made in good faith, without collusion or fraud and the information contained in the Tender is true and correct to the best of our knowledge and belief.

We understand that our Tender is binding on us and that you are not bound to accept a Tender you receive.

We confirm that no Technical deviations are attached here with this commercial offer.

Thanking you,

Yours faithfully,

(Signature of the Bidder)
Printed Name
Designation
Seal
Date:
Business Address:

10.2 Format 2 – Breakdown of cost components

1. Bidder should provide all prices as per the prescribed format. Bidder should not leave any field blank. In case the field is not applicable, Bidder must indicate "0" (Zero) in all such fields.
2. All the prices (even for taxes) are to be entered in Indian Rupees ONLY excluding AMC charges for landing station equipment which shall be in percentage of the equipment cost and in Indian rupees.
3. Bidder to quote consolidated prices in the following manner in Schedule C1 and C2:
   (i) Inclusive of all levies and taxes viz. excise duty, custom duty, VAT, sales tax, service tax, octroi, packing forwarding, freight, insurance, installation & commissioning, etc.
   (ii) Exclusive of levies and taxes but inclusive of packing forwarding, freight, insurance, installation & commissioning, etc.
4. The summary of consolidated prices excluding taxes and duties in Schedule A & B should tally with the total in the supporting schedule at C1, C2 and E1 and E2.
5. Bidders to also indicate estimated taxes and duties in format in Schedule C1 and C2, however taxes and duties excluding any interest or penalty shall be reimbursed at actual against documents for supplying undersea cable system and landing station equipment. Bidders should also take into account octroi applicable in A & N Islands.
6. The quoted prices by bidder should be based on scope of the work as mentioned in Clause IV and major bidding parameter as per Schedule F. However, the major bidding parameter as per Schedule F is only for the purpose of comparison of the bids and bidders shall be solely responsible for quoting all the items required for providing the services as per the contract.
7. The Bidder also needs to account for all applicable taxes and duties, packing, forwarding, freight, insurance, installation, commissioning charges including marine charges, boarding, lodging and other incidental expenses.
8. Furthermore, any other item required for the overall integration and functioning of the undersea cable system shall be within the scope of the bidder.
9. The bidder shall also provide all required equipment which may not be specifically stated in the RFP but are required to meet the intent of ensuring completeness, maintainability and reliability of the total system covered under this Project.
10. All the components / equipment / software / hardware quoted in should include the cost of supply, installation, commissioning, testing, taxes, levies, warranty charges for 5 years, insurance upto handing over the project etc. under the relevant column in the schedules.

11. The capital cost should include 10 Gb (1 λ) bandwidth for the entire O&M period of 15 years. Additional bandwidth charges shall be obtained from bidder on as and when required basis.
12. The bidder will ensure that prices/ cost for all the items/licenses will be valid for the entire period of contract and without any additional Operational and Maintenance charges for the same.
13. The unit rate as mentioned in the format in Schedule C1 & C2 shall be used for the purpose of payment of actual quantity to be verified by third party agency.
14. Operation and Maintenance expenses shall be divided into the following:
    (a) Manpower cost which shall be for the estimated manpower as mentioned in Schedule F and annual increase shall be based on Consumer Price Index (CPI).
    (b) Comprehensive AMC for equipment on landing station as percentage of capital cost of landing station.
    (c) Repair of wet part (undersea cable) shall be on actual basis based on the scale of charges by cable maintenance agency like M/s SEAIOCMA. The bidder shall be paid 15% of SEAIOCMA fixed annual charges towards their administrative expenses.
15. Electricity charges and diesel consumed for backup DG Set shall be arranged by bidder but reimbursed on actual by ANIIDCO.
16. Bidders should quote price for the operation and maintenance expenses in Schedule D1 for manpower cost for the first year and in Schedule D2 for AMC charges after warranty period of 5 years upto 15 years. AMC charges to be quoted in percentage of the cost of equipment and in amount in rupees per year and for the entire period beyond warranty period of 5 years upto 15 years.
17. Bidders to also indicate applicable taxes and duties on O&M expenses, however, taxes and duties shall be reimbursed at actual against documents.
18. Successful bidder shall be decided based on consolidated prices excluding taxes and duties for capital cost of undersea cable system and landing station equipment and discounted annual maintenance charges for landing stations for a period of 10 years after warranty period of 5 years and discounted manpower charges for a period of 15 years without taking into account annual increase due to CPI.
19. Applicable TDS shall be deducted at the time of the payment to the successful bidder.

Schedule A: Summary of price of undersea cable system with 2 BU in the same cable connecting six islands i.e. Port Blair, Havelock, Little Andaman, Car Nicobar, Kamorta and Great Nicobar:

(Amount in ₹ excluding all taxes)

Sl. No.	Particulars	Schedule	Port Blair	Other five Islands	Total
1.	Total price of undersea cable system & landing station equipment (CAPEX)	To be captured from grand total of respective BMs of Schedule C1 (Col. 16, 17 & 18)			
2.	Operation and Maintenance charges (OPEX)				
(i)	Discounted manpower cost	As per Col. 8, 9 & 10 of Schedule E1			
(ii)	Discounted AMC for landing station after warranty period	As per Col. 7 & 8 of Schedule E2			
	Sub Total (OPEX)				
3.	**Total Cost (1+2)** (CAPEX + OPEX)				

Schedule B: Additional Optional Cost for connecting Neil Island, Teressa, Katchal, creeks in Middle Andaman

(Amount in ₹ excluding all taxes)

Sl. No.	Item	Schedule	Neil Island	Teressa & Katchal	Creeks in Middle Andaman	Total
1.	Total price of undersea cable system & landing station equipment (CAPEX)	As per Col.15, 16 & 17 of Schedule C2				
2.	Operation and Maintenance charges (OPEX)					
(i)	Discounted manpower cost	As per Col. 12 of Schedule E1				
(ii)	Discounted AMC for landing station after warranty period	As per Col10 of Schedule E2				
	Sub Total (OPEX)					
3.	**Total Cost (1+2)** (CAPEX + OPEX)					

Schedule C1 – Price breakup for landing stations and undersea cable system for six islands (Port Blair & other five islands)

Amount in ₹

Sl. No.	Item Description	Unit	Quantity			Unit Price (excluding taxes and duties)	Taxes				Unit Price (including all taxes) (7+9+11)	Total Amount					
			BU-1 to Port Blair	Port Blair to other five islands and to BU-2	Total (4+5)		Customs		Sales Tax, Service Tax, Octroi etc.			Including of all taxes			Excluding of all taxes		
							%	Amount (6x8)	%	Amount (6x10)		Port Blair (4x12)	Other five islands (5x12)	Total (6x12)	Port Blair (4x7) BM- a	Other five islands (5x7) BM-b	Total (6x7)
(1)	**(2)**	**(3)**	**(4)**	**(5)**	**(6)**	**(7)**	**(8)**	**(9)**	**(10)**	**(11)**	**(12)**	**(13)**	**(14)**	**(15)**	**(16)**	**(17)**	**(18)**
I. Route Survey (BM 1)																	
1	Marine route survey and Terrestrial route design	Lump sum															
	Sub Total (BM 1)																
II. Undersea Cable and other submerged equipment excluding marine installation and commissioning (BM 2a + BM 2b)																	
1.	Undersea cable excluding marine charges																
a)	Rock Armored	Kms	06	19	25												
b)	Double Armored	Kms	29	91	120												
c)	Single Armored	Kms	94	296	390												
d)	Light Weight Protection/Light Weight Armored	Kms	46	144	190												
e)	Light Weight	Kms	108	342	450												
2.	All other submerged equipment like repeaters etc.	Set	01	05	06												
3.	IRU charges for the fibre pair from Chennai & Singapore for 15 years	Lump sum															

4.	Initial restoration of 10 G	Lump sum																
	Sub Total (BM 2a + BM 2b)																	
III. Utilities including installation and commissioning (BM 3a + BM 3b)																		
1.	DG set (25 KVA)	Nos.	02	10	12													
2.	Other equipment (Air Conditioning, Fire Fighting, BMS, CCTV etc.)	Set	01	05	06													
	Sub Total (BM 3a + BM 3b)																	
IV. Terminal station equipment, terrestrial cables, spares including installation and commissioning (BM 4a + BM 4b)																		
1.	Beach Manhole (8" X 8" X 8")	Set	01	05	06													
2.	Landing station equipment with spares	Set	01	05	06													
3.	Terrestrial cable for all six landing stations	kms.	04	36	40													
	Sub Total (BM 4a + BM 4b)																	
V. Marine Installation (BM 5a + BM 5b)																		
1.	Undersea cable																	
a)	Rock Armored	Kms	06	19	25													
b)	Double Armored	Kms	29	91	120													
c)	Single Armored	Kms	94	296	390													
d)	Light Weight Protection/Light Weight Armored	Kms	46	144	190													
e)	Light Weight	Kms	108	342	450													
f)	One meter plough burial	Kms	40	130	170													
	Sub Total (BM 5a + BM 5b)																	
	Grand Total (I+II+III+IV+V)																	

Schedule C2 – Price breakup for landing stations and undersea cable system for optional three islands and two creeks

Amount in ₹

Sl. No.	Item Description	Unit	Quantity				Unit Price (excluding taxes and duties)	Taxes				Unit Price (including of all taxes)	Total Amount				
								Customs		Sales Tax, Service Tax, Octroi etc.			Including of all taxes (7x13)	Excluding of all taxes			
			Neil Island	Teressa & Katchal	Creeks in Middle Andaman	Total		%	Amount	%	Amount			Neil Island (4x8)	Teressa & Katchal (5x8)	Creeks in Middle Andaman (6x8)	Total (7x8)
1	**2**	**3**	**4**	**5**	**6**	**7**	**8**	**9**	**10**	**11**	**12**	**13**	**14**	**15**	**16**	**17**	**18**
I. Route Survey (BM 1)																	
1	Marine route survey and Terrestrial route design	Lump sum															
	Sub Total (BM 1)																
II. Undersea Cable and other submerged equipment excluding marine installation and commissioning (BM 2a + BM 2b)																	
1.	Undersea cable excluding marine charges																
a)	Rock Armored	Kms	10	14.5	0.5	25											
b)	Double Armored	Kms	10	19	01	30											
c)	Single Armored	Kms	03	07	---	10											
d)	Light Weight Protection/Light Weight Armored	Kms	03	07	---	10											
e)	Light Weight	Kms	---	---	---	00											
2.	All other submerged equipment like repeaters etc.	Set	01	02	02	05											
	Sub Total (BM 2a + BM 2b)																

III. Utilities including installation and commissioning (BM 3a + BM 3b)																		
1.	DG set	Nos.	02	04	---	06												
2.	Other equipment (Air Conditioning, Fire Fighting, BMS, CCTV etc.)	Set	01	02	---	03												
	Sub Total (BM 3a + BM 3b)																	
IV. Terminal station equipment, terrestrial cables, spares including installation and commissioning (BM 4a + BM 4b)																		
1.	Beach Manhole (8" X 8" X 8")	Set	01	02	---	03												
2.	Landing station equipment	Set	01	02	---	03												
3.	Terrestrial cable for optional three islands & two creeks	kms.	3.5	6.5	---	10												
	Sub Total (BM 4a + BM 4b)																	
V. Marine Installation (BM 5a + BM 5b)																		
1.	Undersea cable																	
a)	Rock Armored	Kms	10	14.5	0.5	25												
b)	Double Armored	Kms	10	19	01	30												
c)	Single Armored	Kms	03	07	---	10												
d)	Light Weight Protection/Light Weight Armored	Kms	03	07	---	10												
e)	Light Weight	Kms	---	---	---	00												
f)	One meter plough burial	Kms	10	19	01	30												
	Sub Total (BM 5a + BM 5b)																	
	Grand Total (I+II+III+IV+V)																	

Schedule D: Operation & Maintenance Charges

Schedule D1: Manpower Charges

Sl. No.	Particulars	Amount for the 1st year
1.	Port Blair	
2.	Chennai	
3.	Other five islands	
	Sub Total	
4.	Optional three islands	

Schedule D2: Annual Maintenance Charges for landing stations

(Amount in % and ₹)

Sl. No.	Item		Years		
			6th to 10th (per year)	11th to 15th (per year)	Total (for post warranty period of 10 years)
1.	Port Blair	%			
		₹			
2.	Other five islands	%			
		₹			
	Sub Total	₹			
3.	Optional three islands	%			
		₹			
	Grand Total	₹			

Note: 1. Bidders to quote percentage of capital cost
2. Bidders to indicate separately the applicable tax.

Schedule E1: Discounted manpower charges

Year	Manpower Charges in INR					Discounted Factor @ 10%	Discounted Manpower Cost				
	Port Blair	Chennai	Other five islands	Sub Total of six islands	Optional three islands		Port Blair (2x7)	Chennai (3x7)	Other five islands (4x7)	Sub Total of six islands (5x7)	Optional three islands (6x7)
1	**2**	**3**	**4**	**5**	**6**	**7**	**8**	**9**	**10**	**11**	**12**
1						0.909					
2						0.826					
3						0.751					
4						0.683					
5						0.621					
6						0.564					
7						0.513					
8						0.467					
9						0.424					
10						0.386					
11						0.350					
12						0.319					
13						0.290					
14						0.263					
15						0.239					

Note: Manpower cost quoted for the 1st year to be taken for all the balance 15 years without taking into account increase due to CPI.

Schedule E2: Discounted Annual Maintenance Charges

Year	AMC				Discounting Factor @ 10%	Discounted AMC			
	Port Blair	Other five islands	Sub Total of six islands	Optional three islands		Port Blair (2x6)	Other five islands (3x6)	Sub Total of six islands (4x6)	Optional three islands (5x6)
1	**2**	**3**	**4**	**5**	**6**	**7**	**8**	**9**	**10**
6					0.564				
7					0.513				
8					0.467				
9					0.424				
10					0.386				
11					0.350				
12					0.319				
13					0.290				
14					0.263				
15					0.239				

Schedule F: Major parameters for undersea cable project

Burial type : 1 mtr (deep) Plough burial

Undersea Cable, burial and terrestrial cable

Sl. No.	Cable Type	Quantity (in Kms)		
		Six Islands	Optional Islands & Creeks	Total
Undersea Cable				
1	Rock Armored	25	25	50
2	Double Armored	120	30	150
3	Single Armored	390	10	400
4	Light Weight Protection/Light Weight Armored	190	10	200
5	Light Weight	450	00	450
	Total	1175	75	1250
6	1 mtr plough burial	170	30	200
7	Terrestrial Cable	40	10	50

Cable length : 1250 km including slack& spare

Civil construction : DG: 2 x 25KvA for each islands
Battery backup: 8 hrs
Diesel capacity: 1 week for 3 islands (Kamorta, Katchal, Teressa) and 3 days for others

BMH : 8ft x 8ft x 8ft

Manpower:

Station	L3 (Technicians)	L2 (Engineers)	L1 (Station Manager)	Security Support
Qualification	(i) 1st class diploma in Electronics & Communication Engineering or Electronics & Electrical Engineering or Electrical from recognized board. (ii) Certified network administrator	(i) 1st class degree in Electronics & Communication Engineering or Electronics & Electrical Engineering from recognized university. (ii) Certified network administrator	(i) 1st class degree in Electronics & Communication Engineering or Electronics & Electrical Engineering from recognized university. (ii) Certified network administrator	10th Pass with vocational certificate on Fire fighting from authorized institute
Experience	Minimum 3 years experience in managing landing station	Minimum 3 years experience in network administration/managing landing station	Minimum 8 years experience in network administration	

Station	L3 (Technicians)	L2 (Engineers)	L1 (Station Manager)	Security Support
Six Islands and Chennai				
Port Blair	04	01	01	03
Campbell Bay	04	01	01	03
Chennai	04	00	00	00
Other 04 islands	08	00	00	12
Sub Total	**20**	**02**	**02**	**18**
Optional 03 islands	06	00	00	09
Grand Total	**26**	**02**	**02**	**27**

Note: The estimated undersea cable distance is only in the case of spur route cable from an existing cable system from mainland India to South East Asia passing through A & N Islands. In other cases of an independent cable from anywhere else from mainland India or any other part of the world to A & N Islands, the bidder has to mention the actual length of cable.

11. ANNEXURES

11.1 Annexure – 1: Consortium Criteria

Consortium Criteria

In case of consortium the prime bidder must be specified by the bidder.

- The prime bidder can not be a partner in more than one consortium. In case of consortium no company will be allowed to participate in more than one bid i.e. they should have exclusive partners in case it is observed that any consortium have a common partner then such consortiums will stand disqualified and under no circumstances their bids will be entertained. An undertaking in this regard has to be enclosed

- In case of a consortium, applicant consortia shall have a valid Memorandum of Understanding (MoU)/agreement (duly registered) among all the members signed by the Chief Executives/ Authorized Signatories of the companies dated prior to the submission of the bid. The MoU/consortium agreement shall clearly state the composition of the consortium who shall be the prime bidder, the complete description of the partner and roles and responsibilities of the partners. The MoU/agreement shall be exclusively for this project and shall be responsible in case of failure by any partner.

- In case of a consortium, the maximum of bidders should not be more than 3 bidders. If the bidder (All members of consortium) is a bidder, it should be registered under Companies Act 1956. Partnership and Proprietor firm are not allowed.

- The bidder (Each member of the Consortium) shall have company registration certificate, registration under labour laws & contract act, valid sales tax registration certificate, valid Service tax registration certificate and Permanent Account Number (PAN) issued by income Tax department. (Copy of each registration should be provided).

- Attested copy of the company's annual report has to be attached along with the bid. Bidder should submit an undertaking that Bidder (or any member of the consortium) is as a company/consortium and product quoted are not Black Listed by any Govt. dept. /agency in India.

- Members of the Consortium shall be jointly and severally liable to the Government for the execution of the project in accordance with the terms of the bid document and a statement of this effect shall be included in the Memorandum of Understanding/ consortium Agreement.

11.2 Annexure–2: Bidding Document Acknowledgement Form

Dated:

To,

The General Manager
ANIIDCO,
Vikas Bhawan
Port Blair – 744101

Dear Sir,

We hereby acknowledge receipt of a complete set of Bidding Documents consisting of seven Annexures (along with their Appendices) enclosed to the "Invitation for Bid" pertaining to providing of_____ services against tender no. _____.

We have noted that the closing date for receipt of the tender by ANIIDCO is _____ at < > hrs. (IST) and opening at < > hrs. (IST) on the same day.

We guarantee that the contents of the above said Bidding Documents will be kept confidential within our organization and text of the said documents shall remain the property of ANIIDCO and that the said documents are to be used only for the purpose intended by ANIIDCO.

Our address for further correspondence on this tender will be as under:

Telex no: …….....
Fax no: ……..... Telephone no: ……..
Personal attention of: …….....
(if required)

Yours faithfully,

(Bidder)

Note: This form should be returned along with offer duly signed

11.3 Annexure – 3: Proforma of Bank Guarantee towards Bid Security

BID BOND

Reference No. _____ Date _____
Bank Guarantee No._____

To,

The General Manager
ANIIDCO,
Vikas Bhawan,
Port Blair – 744101

Sir,

Whereas..... (here in after called "the Bidder") has submitted its bid dated..... (Date) for the execution of..... (here in after called "the Bid")

KNOW ALL MEN by these presents that We .... having our registered office at..... (hereinafter called the "Bank") are bound unto the Managing Director, ANIIDCO (hereinafter called "ANIIDCO") in the sum of ..... for which payment well and truly to be made to the said ANIIDCO itself, its successors and assignees by these presents.

The conditions of these obligations are:

1. If the bidder withdraws its bid during the period of bid validity or
2. If the bidder, having been notified of the acceptance of its bid by ANIIDCO during the period of bid validity:
   1. fails or refuses to execute the contract form if required; or
   2. fails or refuses to furnish the performance security, in accordance with the bid requirement;

We undertake to pay ANIIDCO up to the above amount upon receipt of its first written demand, without ANIIDCO having to substantiate its demand, provided that in its demand ANIIDCO will note that the amount claimed by it is due to it, owing to the occurrence of one or both of the two conditions, specifying the occurred condition or conditions.

This guarantee will remain in force up to (Date) and any demand in respect thereof should reach the Bank not later than the above date.

Date _____
Place _____ Signature _____
Witness _____ Printed Name _____
(Bank's common seal)

11.4. Annexure – 4: Instructions for Furnishing Bank Guarantee

1. The Bank Guarantee will be given on non-judicial stamp paper as per stamp duty applicable at the place from where the purchase CONTRACT has been placed. The non-judicial stamp paper should be in name of the issuing bank.

2. The validity of the Bank Guarantee shall be for a period of five years to be renewed after every five years up to fifteen years and sixty days. The expiry date should be arrived at by adding 60 days to the CONTRACT completion date unless otherwise specified in the bidding documents.
3. The Bank Guarantee will be given from any nationalized banks.

11.5. Annexure – 5: Proforma of Bank Guarantee towards Performance Security

PERFORMANCE GUARANTEE

Ref. No._____ Bank Guarantee No _____
Dated _____

To,

The General Manager
ANIIDCO,
Vikas Bhawan,
Port Blair – 744101

Dear Sir,

1. In consideration of ANIIDCO, having its registered office at Vikas Bhawan, Port Blair – 744101 (hereinafter referred to as `ANIIDCO', which expression shall, unless repugnant to the context or meaning thereof, include all its successors, administrators, executors and assignees) after receipt of the work order dated _____ with M/s _____ having its registered/head office at _____(hereinafter referred to as the 'Implementing Agency') which expression shall, unless repugnant to the context or meaning thereof include all its successors, administrators, executors and assignees) and ANIIDCO having agreed that the Implementing Agency shall furnish to ANIIDCO a performance guarantee for Indian Rupees ..... for the faithful performance of the entire CONTRACT.

1. We (name of the bank) _____ registered under the laws of _____ having head/registered office at _____ (hereinafter referred to as "the Bank", which expression shall, unless repugnant to the context or meaning thereof, include all its successors, administrators, executors and permitted assignees) do hereby guarantee and undertake to pay immediately on first demand in writing any /all moneys to the extent of Indian Rupees. (in figures) _____ (Indian Rupees (in words)_____) without any demur, reservation, contest or protest and/or without any reference to the Implementing Agency. Any such demand made by ANIIDCO on the Bank by serving a written notice shall be conclusive and binding, without any proof, on the bank as regards the amount due and payable, notwithstanding any dispute(s) pending before any Court, Tribunal, Arbitrator or any other authority and/or any other matter or thing whatsoever, as liability under these presents being absolute and unequivocal. We agree that the guarantee herein contained shall be irrevocable and shall continue to be enforceable until it is discharged by ANIIDCO in writing. This guarantee shall not be determined, discharged or affected by the

liquidation, winding up, dissolution or insolvency of the Implementing Agency and shall remain valid, binding and operative against the bank.

3. The Bank also agrees that ANIIDCO at its option shall be entitled to enforce this Guarantee against the Bank as a principal debtor, in the first instance, without proceeding against the Implementing Agency and notwithstanding any security or other guarantee that ANIIDCO may have in relation to the Implementing Agency liabilities.

4. The Bank further agrees that ANIIDCO shall have the fullest liberty without our consent and without affecting in any manner our obligations hereunder to vary any of the terms and conditions of the said CONTRACT or to extend time of performance by the said Implementing Agency from time to time or to postpone for any time or from time to time exercise of any of the powers vested in ANIIDCO against the said Implementing Agency and to forbear or enforce any of the terms and conditions relating to the said agreement and we shall not be relieved from our liability by reason of any such variation, or extension being granted to the said Implementing Agency or for any forbearance, act or omission on the part of ANIIDCO or any indulgence by ANIIDCO to the said Implementing Agency or any such matter or thing whatsoever which under the law relating to sureties would, but for this provision, have effect of so relieving us.

5. The Bank further agrees that the Guarantee herein contained shall remain in full force during the period that is taken for the performance of the CONTRACT and all dues of ANIIDCO under or by virtue of this CONTRACT have been fully paid and its claim satisfied or discharged or till ANIIDCO discharges this guarantee in writing, whichever is earlier.

6. This Guarantee shall not be discharged by any change in our constitution, in the constitution of ANIIDCO or that of the Implementing Agency.

7. The Bank confirms that this guarantee has been issued with observance of appropriate laws of the country of issue.

8. The Bank also agrees that this guarantee shall be governed and construed in accordance with Indian Laws and subject to the exclusive jurisdiction of Indian Courts of Port Blair.

9. Notwithstanding anything contained herein above, our liability under this Guarantee is limited to Indian Rupees. (in figures) _____ (Indian Rupees (in words) _____) and our guarantee shall remain in force until _____. (indicate the date of expiry of bank guarantee)

Any claim under this Guarantee must be received by us before the expiry of this Bank Guarantee. If no such claim has been received by us by the said date, the rights of ANIIDCO under this Guarantee will cease. However, if such a claim has been received by us within the said date, all the rights of ANIIDCO under this Guarantee shall be valid and shall not cease until we have satisfied that claim.

In witness whereof, the Bank through its authorized officer has set its hand and stamp on this..... day of .....20___ at.....

WITNESS NO. 1

(Signature)
Full name and official
address (in legible letters)

(Signature)
Full name, designation and
address (in legible letters)
with Bank stamp

Attorney as per power of
Attorney No.....
Dated…….

WITNESS NO. 2

(Signature)
Full name and official
Address (in legible letters)

11.6. Annexure – 6: List of Permits to be obtained

Sl. No.	Particulars	Latest time of permit as proposed	Responsibility
1.	NLD license from DOT	Before award of the contract	ANIIDCO
2.	Permit in Principle to lay the undersea cable from DOT	Before award of the contract	ANIIDCO
3.	CRZ clearance/NOC from local authority	Before marine installation in terrestrial water and BMH	ANIIDCO
4.	ROW for land route construction from BMH and CLS	Before construction of BMH	ANIIDCO
5.	All operational permits from MOHA, MOD, INSA, DG Shipping, Navy, customers etc.	Before vessel arrival date	Bidder

Annexure 11.7 Scope of work for NOC Operation

A) Normal Operation

1. 24/7 supervision and monitoring of the health of the entire Undersea Cable Network.
2. Preparation of SOP for all landing station and NOC.
3. Keeping log of all alarm (current as well historical alarm) on all NEs.

B) Preventive Maintenance.

1) Should provide advance intimation to all users/customers during planned and unplanned activities with MTTR for the respective operations

2) Regular updates 2, 4, 8 hrs as applicable to the specific events to be provided to all users/customers during planned/unplanned activities

3) Responsibility of maintenance of DCN and A-DCN network, routine check up for end to end connectivity.

C) Breakdown Maintenance

1) Coordination with cable ship and landing station during shunt fault and cable fault for power reconfiguration on each segment for cable mobilization for repair

2) Coordination with landing station during critical failure for landing station equipments**.**

D) Inventory Maintenance

Advising on identifying fault on landing station NEs , replacing faulty card with spare one, arranging faulty card to send to supplier for repair and return as well maintain all spare equipments, test instruments at different landing stations including NOC/BNOC/ROP.

E) Inventory of Manpower

Shall be responsible for keeping audit on manpower at all landing stations as well in NOC as agreed in the RFP.

F) Training

All landing station/NOC staff should be regularly updated with technical training to maintain the system, handle the test instruments by taking measurements for various measuring conditions.

G) BNOC/ROP

Should have BNOC facility at Port Blair, else ROP facility of NOC at Port Blair having compliance of NOC tools and features.

Any other activity specifically not mentioned above for smooth functioning of the NOC.

11.7. Annexure – 8: Abbreviations

1λ .	-	Bandwidth equivalent to 10 Gbps
AMC	-	Annual Maintenance contract
ANIIDCO	-	Andaman & Nicobar Islands Integrated Development Corporation
BMS	-	Building Management System
BOM	-	Bill of Material
BU	-	Branching Unit
CAPEX	-	Capital Expenditure
CCTV	-	Close Circuit Television, Camera for Surveillance
CRZ	-	Costal Regulation Zone
DDF	-	Digital Distribution Frame
DWDM	-	Dense Wavelength Division Multiplexing
FAT	-	Final Acceptance Testing
FEA	-	Far East Asia, Submarine OFCable between Chennai & Singapore
GPS antenna	-	Global Positioning System
HVAC	-	Humidity Ventilation and Air Conditioning
i2i	-	Bharti's Submarine OFCable between Chennai & Singapore
IPR	-	Intellectual Property right
ITUT	-	International Telecommunication Union
MC	-	Maintenance Contract
MHA	-	Ministry of Home Affairs
MOU	-	Memorandum of Understanding
NOC	-	Network Operating Centre
NLD	-	National Long Distance, License for telecom services in the nation
ODF	-	Optical Distribution Frame
OEM	-	Original Equipment Manufacturer
O&M	-	Operation and Maintenance
OPEX	-	Operating Expenditure
PFE	-	Power Feeding Equipment

RFCS	-	Ready for Commercial Service
RFP	-	Request for Proposal
SEAIOCMA	-	The South East Asia & Indian Ocean Cable Maintenance Agreement
SDH	-	Synchronous Digital Hierarchy,
SIA	-	State Implementation Agency
SLA	-	Service Level Agreement
SLD	-	Single Line Diagram
SLTE	-	Submarine line Terminal Equipment
TIC	-	Tata Indicom Cable system, Submarine of Cable between Chennai & Singapore
VESDA	-	Very Early Warning Aspirating Smoke Detection, Alarm reporting system